Rexroth
Bosch Group

4/2 directional seat valve, pilot operated

RE 22069/05.11 1/12

Type M-Z4SEH


H7761+7762

Size 10 and 16
Component series 2X
Maximum operating pressure 315 bar
Maximum flow 300 l/min

Table of contents

Information on available spare parts:
www.boschrexroth.com/spc

Features

- Sandwich plate valve
- Electro-hydraulic actuation
- Porting pattern according to ISO 4401-05-05-0-05 (size 10) and ISO 4401-07-07-0-05 (size 16)
- Wet-pin DC solenoid
- Pilot oil supply optionally internal or external
- Different combinations of the blocking and pass-through functions
- With manual override, optional
- Electrical connection as individual connection

- More information:
  - 3/2 directional seat valve type KSDE (pilot control valve) — Data sheet 18136-21
  - Subplates size 10 — Data sheet 45054
  - Subplates size 16 — Data sheet 45056
  - Sandwich plates, type HSZ, size 10 — Data sheet 48052
  - Sandwich plates, type HSZ, size 16 — Data sheet 48054
  - Hydraulic fluids on mineral oil basis — Data sheet 90220

Ordering code

M	–	Z	4	SEH			–2X/	3	C				K4/		*

Mineral oil **= M**

Sandwich plate **= Z**

4 main ports **= 4**

Type of actuation

Electro-hydraulic **= SEH**

Size 10 **= 10**

Size 16 **= 16**

Symbols

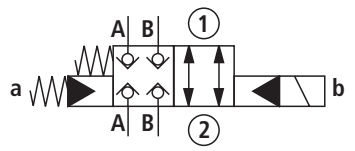

= E

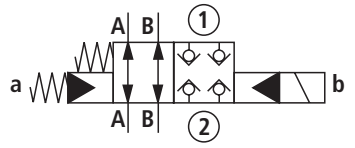

= E1

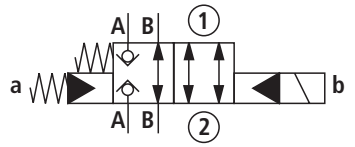

= A

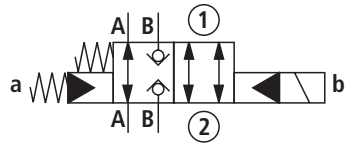

= B

Component series 20 to 29 **= 2X**
(20 to 29: unchanged installation and connection dimensions)

Pilot control valve

3/2 directional seat valve type KSDE **= 3**
(see data sheet 18136-21)

Wet-pin DC solenoid **= C**
with detachable coil

Further details in the plain text

Seal material

N = NBR seals

F = FKM seals

(other seals upon request)

Attention!
Observe compatibility of seals with the hydraulic fluids used!

Electrical connection

K4 [1; 2] **= Without** mating connector, individual connection with connector according to DIN EN 175301-803

XY = Pilot oil supply external, pilot oil return external

PY = Pilot oil supply internal, pilot oil return external

PT = Pilot oil supply internal, pilot oil return internal

XT = Pilot oil supply external, pilot oil return internal

For more information see page 11.

No Code = **Without** manual override

N9 = **With** concealed manual override

N11 = **With** screwable manual override (operation by means of knurled screw)

G24 = Direct voltage 24 V

G205 = Direct voltage 205 V

G96 = Direct voltage 96 V

AC voltage mains (permissible voltage tolerance ±10 %)	**Nominal voltage of the DC solenoid in case of operation with alternating voltage**	**Ordering code**
110 V - 50/60 Hz	96 V	**G96**
230 V - 50/60 Hz	205 V	**G205**

[1] For the connection to AC voltage mains, a DC voltage solenoid **must** be used, which is controlled via a rectifier (see table on the left).

In the case of individual connection, a large mating connector with integrated rectifier can be used (separate order, see page 3).

[2] Mating connectors, separate order, see page 3.

① = component side

② = plate side

Mating connectors according to DIN EN 175301-803

Details and more mating connectors see data sheet 08006	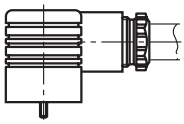	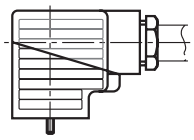		
	Material no.			
Color	without circuitry	with indicator light 12 … 240 V	with rectifier 12 … 240 V	with indicator light and Zener diode suppression circuit 24 V
Gray	**R901017010**	–	–	–
Black	**R901017011**	**R901017022**	**R901017025**	**R901017026**

Symbols: Pilot oil supply (① = component side, ② = plate side)

Version "XY"

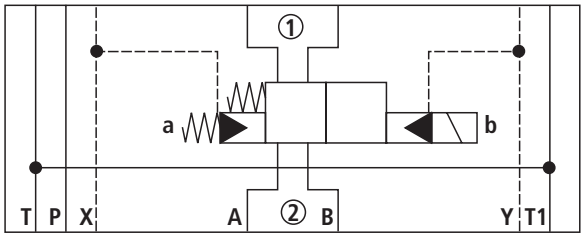

Version "PY"

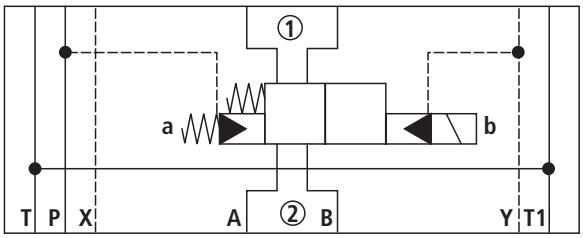

Version "XT"

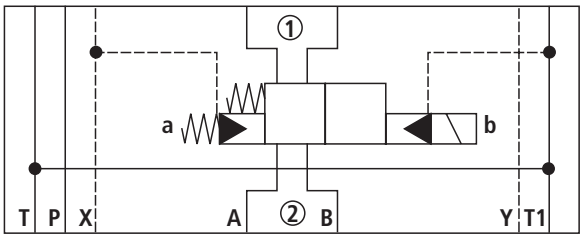

Version "PT"

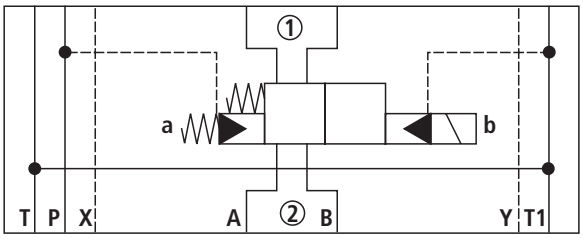

Symbols: Size 10 (① = component side, ② = plate side)

	Pilot control valve normally open, symbol "E"	Pilot control valve normally closed, symbol "E1"
Detailed	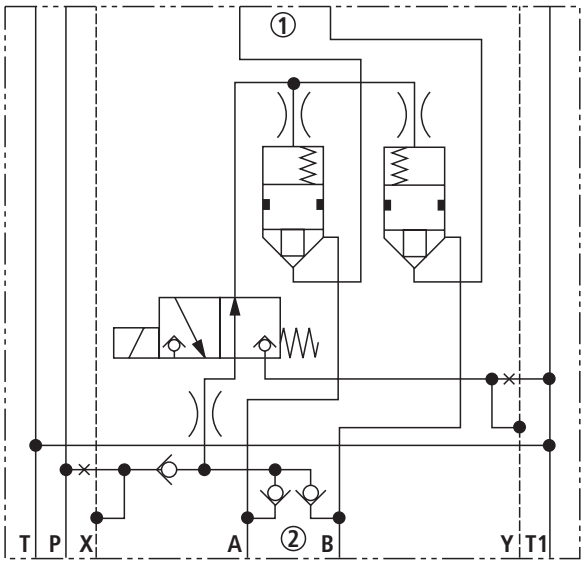	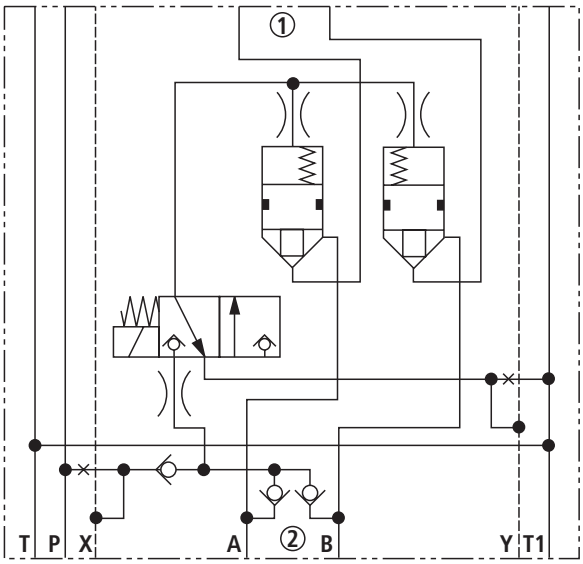
Version "XY"	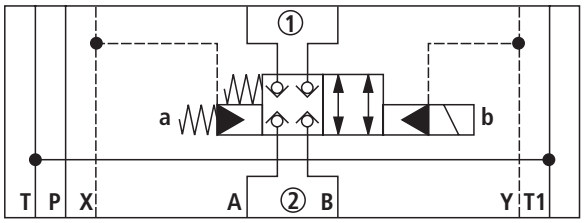	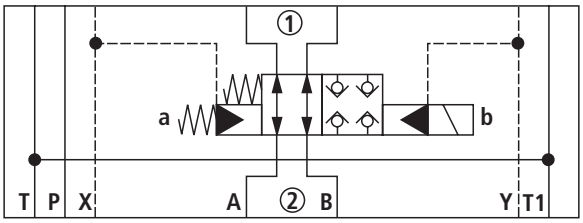

	Pilot control valve normally open, symbol "A"	Pilot control valve normally closed, symbol "B"
Detailed	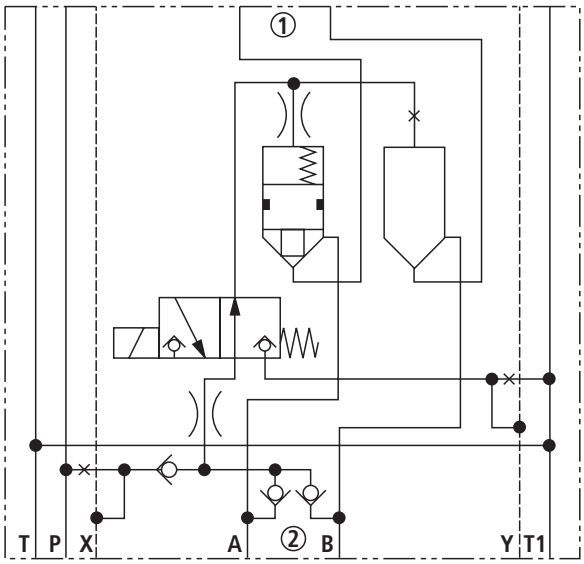	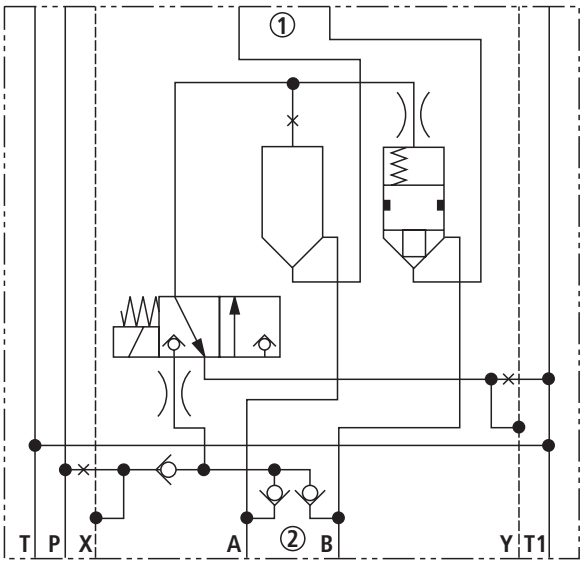
Version "XY"	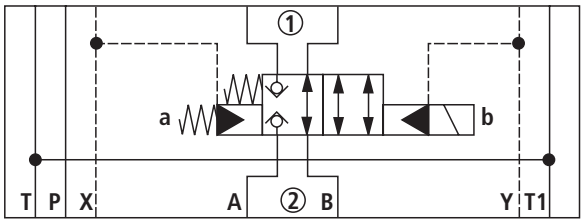	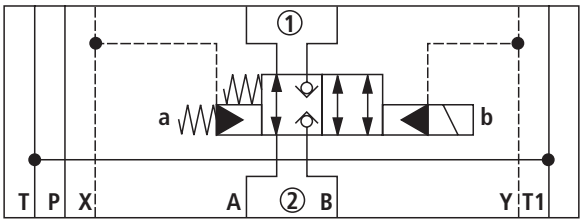

Symbols: Size 16 (① = component side, ② = plate side)

	Pilot control valve normally open, symbol "E"	Pilot control valve normally closed, symbol "E1"
Detailed	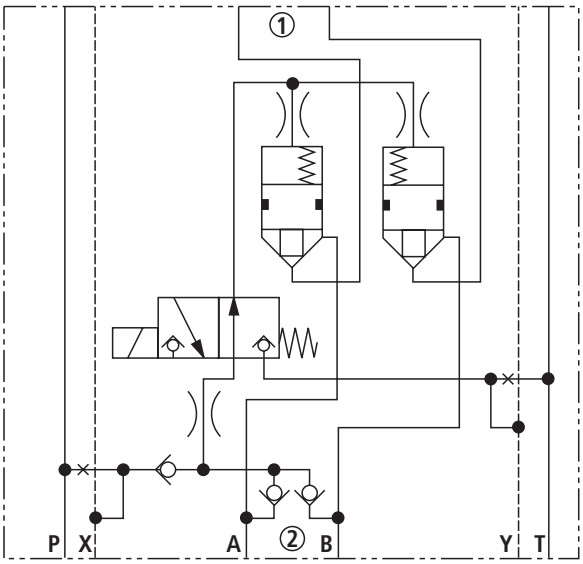	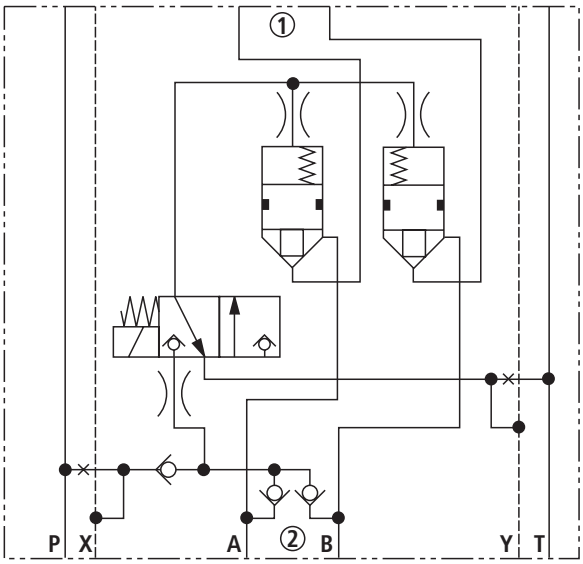
Version "XY"	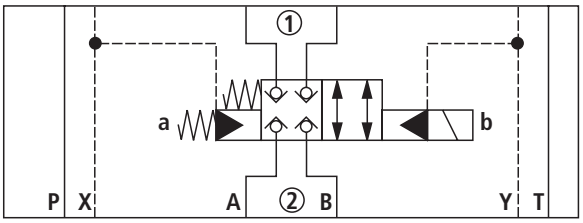	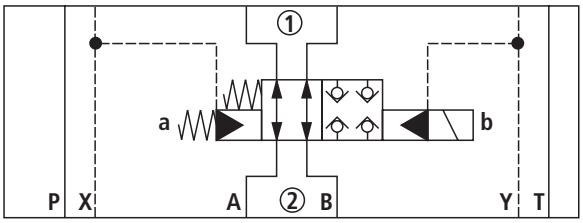

	Pilot control valve normally open, symbol "A"	Pilot control valve normally closed, symbol "B"
Detailed	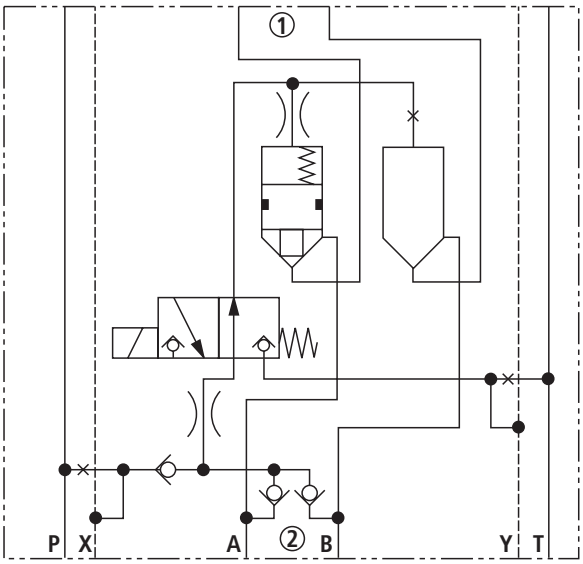	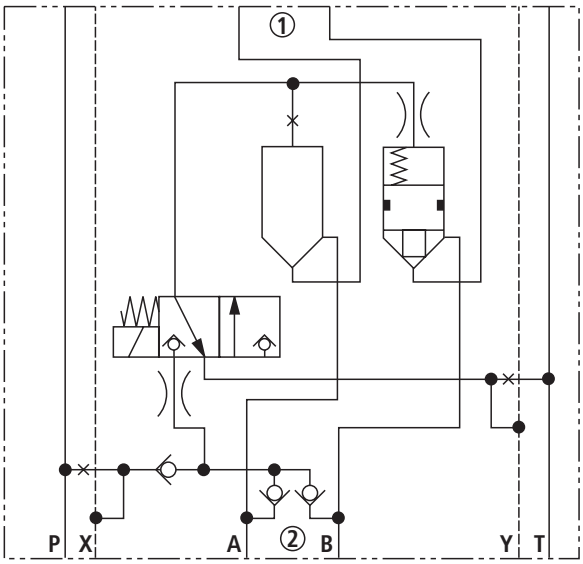
Version "XY"	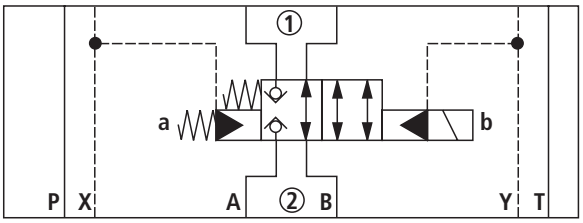	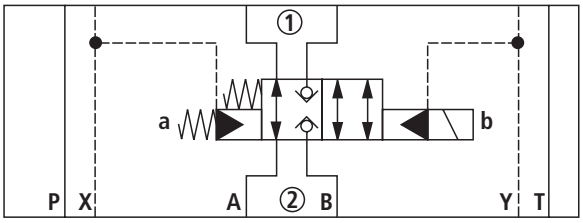

Function, section

General

Directional valve types SEH are directional seat valves with electro-hydraulic operation. Depending on the order version, one- or two-channel connection or shut-off is possible.

The directional valve basically comprises of housing (1), pilot operated check valve installation kit (2), pilot control valve (3) as well as blanking plug for the pilot oil supply. The valve is free-flowing irrespective of the direction and opened or blocked in a leakage-free form depending on the spool position of the pilot control valve and the pressure conditions.

Function

The function of the valve depends on the pressure. The force of the compression spring (4) as well as the compressive force in the control chamber (5) act in closing direction, the compressive forces in channels A and B in opening direction of the valve spool (6) with spool sealing. The effective direction of the resulting force of opening and closing forces determines the spool position of the check valve installation kits (2). The pilot pressure is applied and/or discharged via the pilot control valve (3) depending on the pilot oil supply selection. The pilot oil is supplied via the highest pressure from channels A, B, P or X and is secured by means of a check valve (7).

☞ **Note!**

Nozzles and plug fitting see page 12

Pilot oil supply see page 11.
Symbols see page 3.

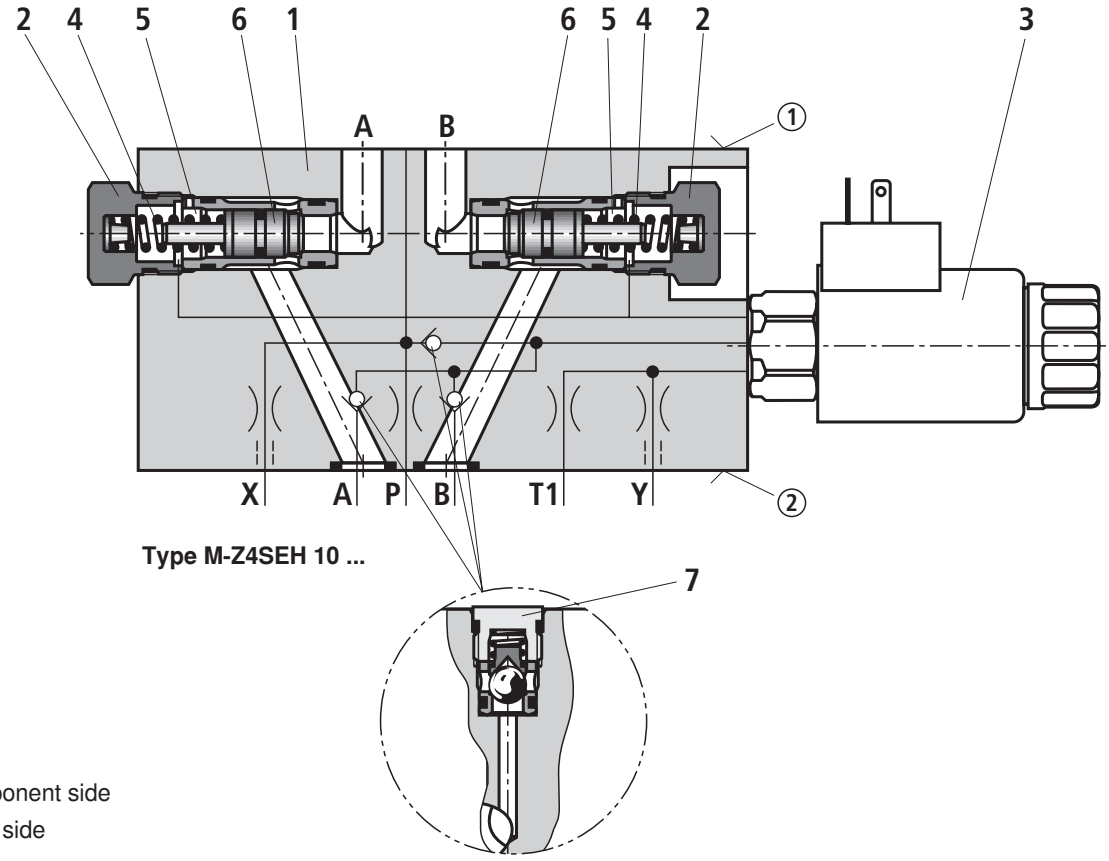

Type M-Z4SEH 10 ...

① = component side
② = plate side

Technical data (For applications outside these parameters, please consult us!)

general

Size	Size	10	16
Weight	kg	6	14
Installation position		Any	
Ambient temperature range	°C	–30 to +80 (NBR seals) –20 to +80 (FKM seals)	

hydraulic

Maximum operating pressure	bar	315	
Maximum flow	l/min	140	300
Hydraulic fluid		See table below	
Hydraulic fluid temperature range (at the valve working ports)	°C	–30 to +80 (NBR seals) –20 to +80 (FKM seals)	
Viscosity range	mm^2/s	10 to 380	
Maximum permitted degree of contamination of the hydraulic fluid - cleanliness class according to ISO 4406 (c)		Class 20/18/15 [1]	

Hydraulic fluid		Classification	Suitable sealing materials	Standards
Mineral oils and related hydrocarbons		HL, HLP, HLPD	NBR, FKM	DIN 51524
Environmentally compatible	– Insoluble in water	HEES	NBR, FKM	ISO 15380
		HEPR	FKM	
	– Soluble in water	HEPG	FKM	ISO 15380
Flame-resistant	– Water-free	HFDU, HFDR	FKM	ISO 12922
	– Water-containing	HFC	NBR	

☞ **Important information on hydraulic fluids!**

- For more information and data on the use of other hydraulic fluids refer to data sheet 90220 or contact us!
- There may be limitations regarding the technical valve data (temperature, pressure range, service life, maintenance intervals, etc.)!
- **Environmentally compatible:** When using environmentally compatible hydraulic fluids that are simultaneously zinc-solving, zinc may accumulate in the medium (700 mg zinc per pole tube).

electric

Voltage type		Direct voltage
Available voltages	V	24; 96; 205
Power consumption	W	22
Duty cycle (ED)		Continuous operation up to ambient temperature 85 °C
Protection class according to EN 60529		IP 65 with mating connector mounted and locked

[1] The cleanliness classes specified for the components must be adhered to in hydraulic systems. Effective filtration prevents faults and at the same time increases the service life of the components.

For the selection of the filters see www.boschrexroth.com/filter.

When establishing the electrical connection, the protective earthing conductor (PE ⏚) has to be connected properly.

☞ **Note!**

For more technical data of the pilot control valve type KSDE see data sheet 18136-21.

Characteristic curves (measured with HLP46, ϑ_{oil} = 40 °C ± 5 °C)

Δp-q_V characteristic curves
Size 10

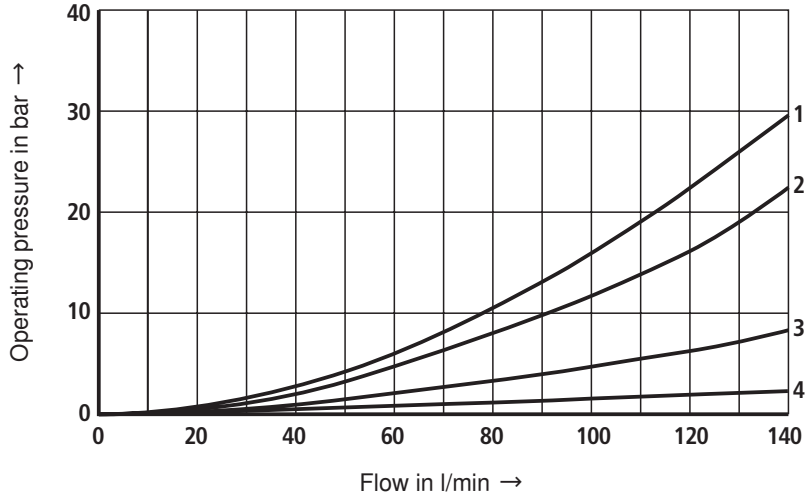

Δp-q_V characteristic curves
Size 16

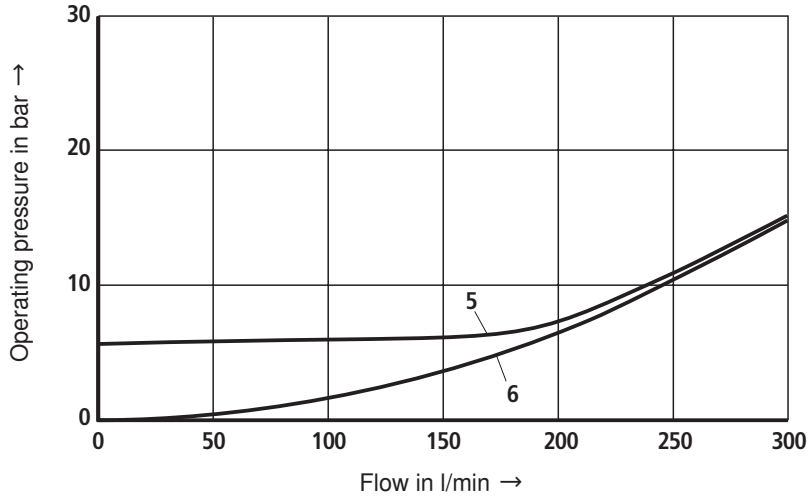

1 B① → B②
2 A① → A②
3 T① → T②
4 P① → P②
5 A② → A①; B② → B①
6 A① → A②; B① → B②

① = component side
② = plate side

Unit dimensions: Size 10 (dimensions in mm)

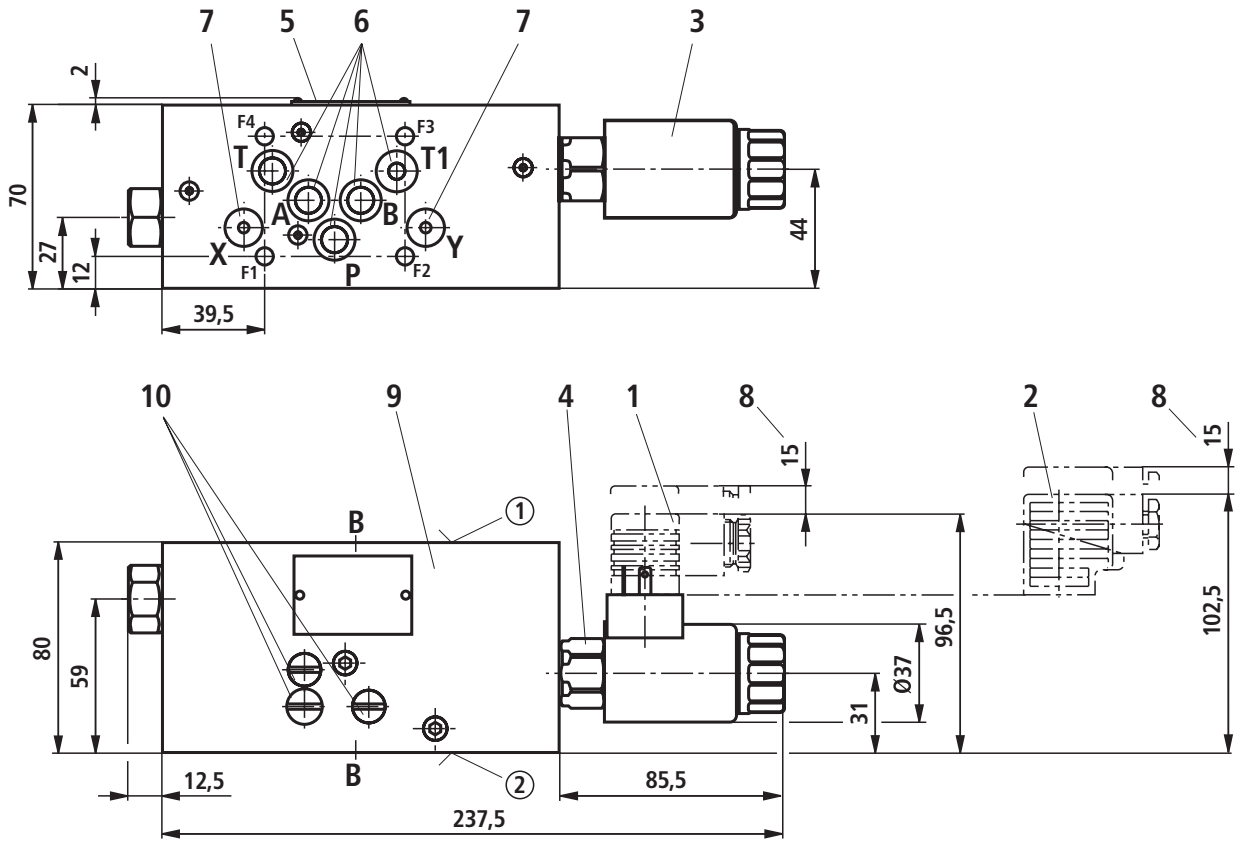

① Component side – porting pattern according to ISO 4401-05-05-0-05

② Plate side – porting pattern according to ISO 4401-05-05-0-05

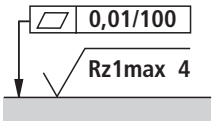

Required surface quality of the valve mounting face

1 Mating connector **without** wiring (separate order, see page 3)

2 Mating connector **with** wiring (separate order, see page 3)

3 DC solenoid "a" (mating connector color gray)

4 3/2 directional seat valve type KSDE (see data sheet 18136-21)

5 Name plate

6 Identical seal rings for ports A, B, P, T and T1

7 Identical seal rings for ports X and Y

8 Space required for removing the mating connector

9 Main valve

10 Plug screw or check valve, tightening torque M_A = 8 Nm

Subplates according to data sheet 45054 (separate order)

Valve mounting screws (separate order)

4 hexagon socket head cap screws ISO 4762 - M6 - 10.9

☞ **Note!**

Length and tightening torque of the valve mounting screws must be calculated according to the components mounted under and over the sandwich plate valve.

Unit dimensions: Size 16 (dimensions in mm)

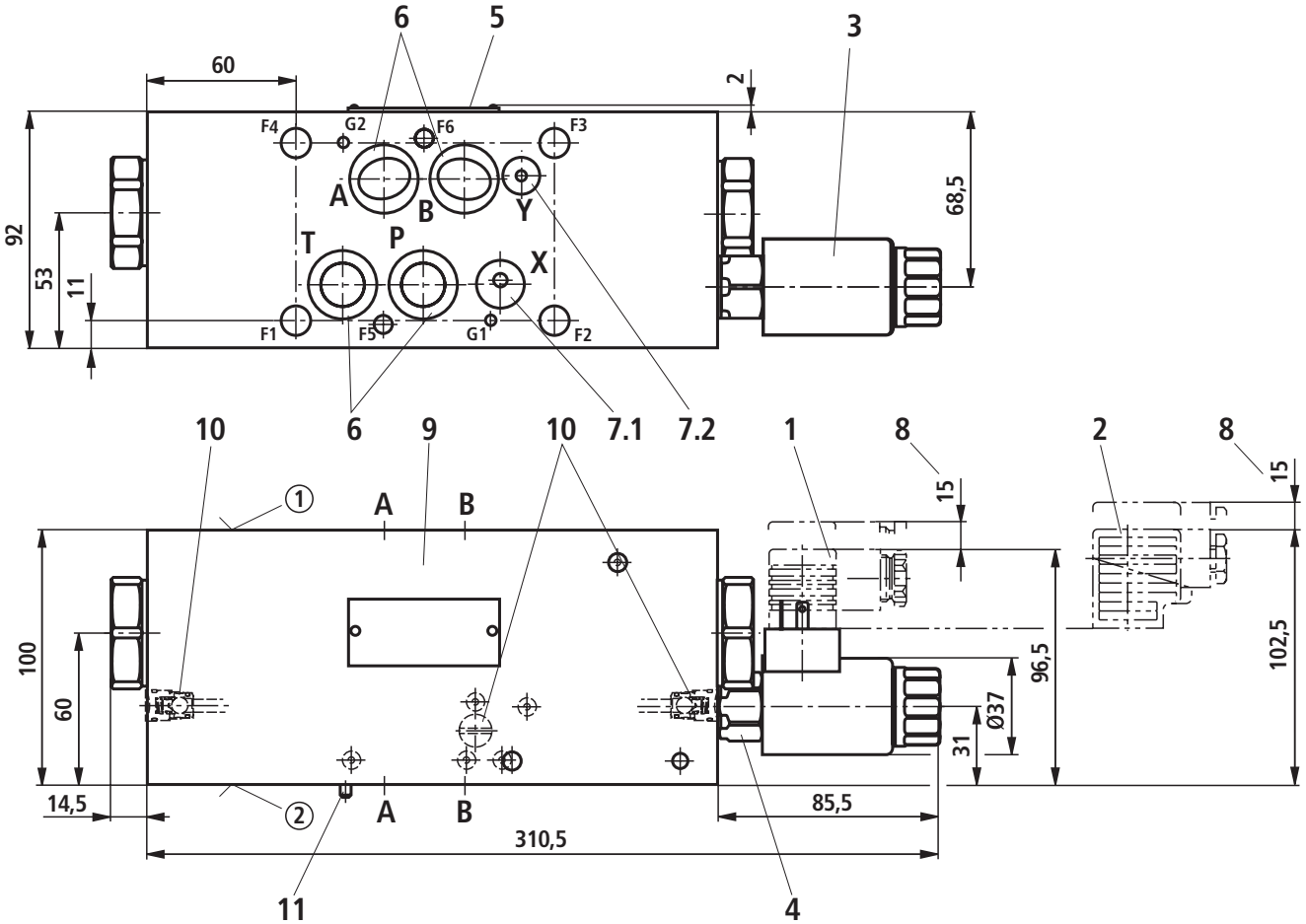

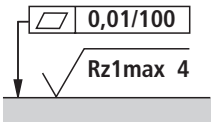

Required surface quality of the valve mounting face

① Component side – porting pattern according to ISO 4401-07-07-0-05

② Plate side – porting pattern according to ISO 4401-07-07-0-05

1 Mating connector **without** wiring (separate order, see page 3)

2 Mating connector **with** wiring (separate order, see page 3)

3 DC solenoid "a" (mating connector color gray)

4 3/2 directional seat valve type KSDE (see data sheet 18136-21)

5 Name plate

6 Identical seal rings for ports A, B, P, and T

7.1 Seal ring for port X

7.2 Seal ring for port Y

8 Space required for removing the mating connector

9 Main valve

10 Plug screw or check valve, tightening torque M_A = 8 Nm

11 Grooved pin

Subplates according to data sheet 45056 (separate order)

Valve mounting screws (separate order)

4 hexagon socket head cap screws ISO 4762 - M10 - 10.9

☞ **Note!**

Length and tightening torque of the valve mounting screws must be calculated according to the components mounted under and over the sandwich plate valve.

Pilot oil supply

Version "XY"

The pilot oil supply is implemented **externally** via channel X from a separate circuit.

The pilot oil return is implemented **externally** via channel Y into the tank.

Version "PY"

The pilot oil supply is implemented **internally** from channel P of the main valve.

The pilot oil return is implemented **externally** via channel Y into the tank. In the subplate, port X is closed.

Version "PT"

The pilot oil supply is implemented **internally** from channel P of the main valve.

The pilot oil return is implemented **internally** via channel T into the tank. In the subplate, ports X and X are closed.

Version "XT"

The pilot oil supply is implemented **externally** via channel X from a separate circuit.

The pilot oil supply is implemented **internally** via channel T into the tank. In the subplate, port Y is closed.

		Port	Internal	External	Port in subplate closed
Version "XY"	Pilot oil supply	X	–	✓	–
	Pilot oil return	Y	–	✓	
Version "PY"	Pilot oil supply	P	✓	–	X
	Pilot oil return	Y	–	✓	
Version "PT"	Pilot oil supply	P	✓	–	X and Y
	Pilot oil return	T	✓	–	
Version "XT"	Pilot oil supply	X	–	✓	Y
	Pilot oil return	T	✓	–	

Project planning information

Plug for size 10

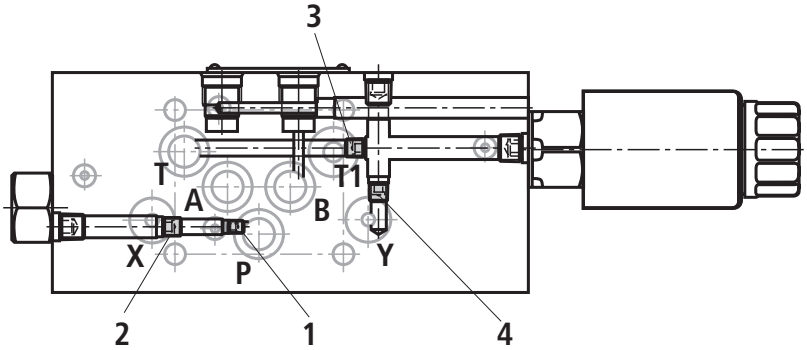

Plug for size 16

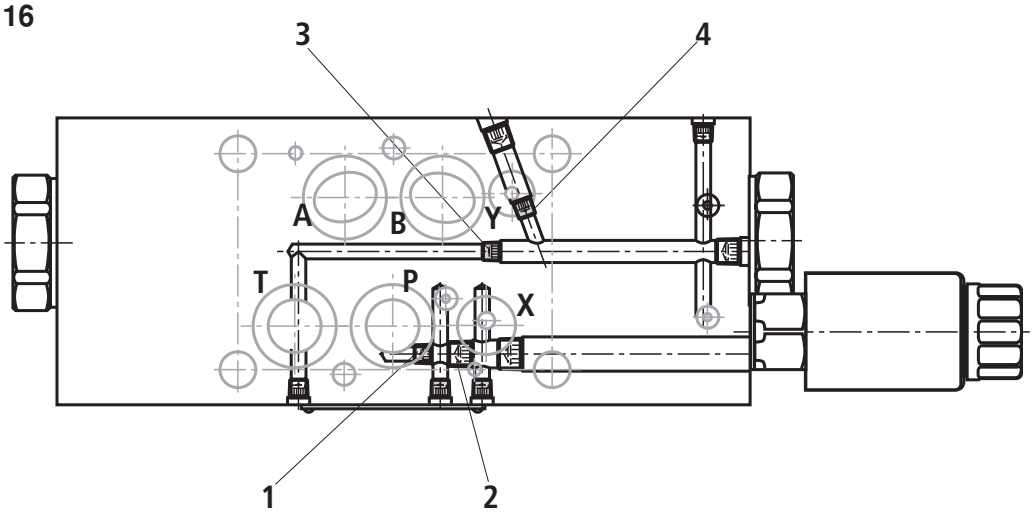

Item	Version	Plug screw	
		Size 10	Size 16
1	"XY"	M4 x 5	M6
3		M6	M6
2	"PY"	M6	M8 x 1
3		M6	M6
1	"PT"	M4 x 5	M6
4		M6	M6
2	"XT"	M6	M8 x 1
4		M6	M6

Tightening torques M_A in Nm		
	Size 10	Size 16
Plug or check valve (channel A, B, P and X)	8	45
3/2 directional seat valve type KSDEU (see data sheet 18136-21)	45	45
Mounting screw coil	4	4
Plug screw 2-way cartridge valve	25	100

Bosch Rexroth AG
Hydraulics
Zum Eisengießer 1
97816 Lohr am Main, Germany
Phone +49 (0) 93 52 / 18-0
Fax +49 (0) 93 52 / 18-23 58
documentation@boschrexroth.de
www.boschrexroth.de