Proportional relief valves

digital, pilot operated, open loop, subplate or modular mounting

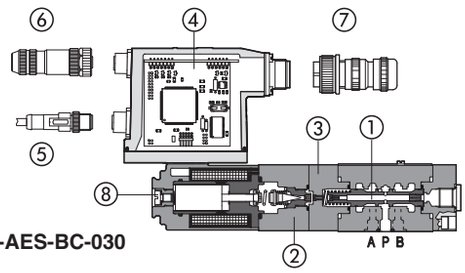

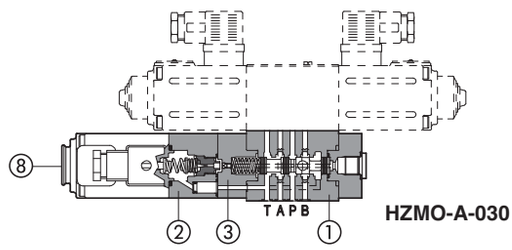

① Main spool
② Proportional pilot relief valve
③ Pilot flow compensator
④ Integral electronics
⑤ USB connector
⑥ Fieldbus connector
⑦ Main connector
⑧ Screw for air bleeding

RZMO-A, RZMO-AEB, RZMO-AES HZMO-A

Spool type pilot operated digital proportional relief valves for pressure open loop controls, available in subplate or modular mounting.

Executions:

- **A** without integral driver, to be coupled with separated drivers, see section 2
- **AEB** with basic integral digital electronic driver, analog reference signals and USB port for software functional parameters setting
- **AES** with full integral digital electronic driver and fieldbus interface for functional parameters setting, reference signals and real-time diagnostics

The integral digital electronic driver performs the valve's hydraulic regulation according to the reference signal and assures valve-to-valve interchangeability thanks to the factory presetting

Size: **06**
Max flow: **40 l/min**
Max pressure: **350 bar**

1 MODEL CODE

RZMO - A EB - NP - 030 / 315 / * ** / *

Proportional pressure relief valve size 06

RZMO = subplate
HZMO = modular

A = open loop pressure control

- = omit for execution with separated driver see section 2

Only for RZMO:
EB = basic integral driver
ES = full integral driver

Fieldbus interfaces - USB port always present **(1)**:
NP = Not present **BP** = PROFIBUS DP
BC = CANopen **EH** = EtherCAT

Configuration:
030 = regulation on port P, discharge in T (pilot operated version)

Max regulated pressure:
50 = 50 bar
100 = 100 bar **315** = 315 bar
210 = 210 bar **350** = 350 bar

Coil voltage only for **A** - see sect. 8:
- = standard coil for 24V$_{DC}$ Atos drivers
6 = optional coil for 12V$_{DC}$ Atos drivers
18 = optional coil for low current drivers

Electronics options
only for **AEB, AES** - see sect. 9:
I = current reference input 4 ÷ 20 mA (omit for standard voltage reference input 0 ÷ 10 V)
Q = enable signal
Z = double power supply, enable, fault and monitor signals - 12 pin connector

Series number

Seals material, see sect. 5, 6:
- = NBR
PE = FKM
BT = HNBR

(1) Omit for **A** execution; **AEB** available only in version **NP**; **AES** available only in version **BC**, **BP**, **EH**

2 ELECTRONIC DRIVERS

Valve model	A										AEB	AES
Drivers model	E-MI-AC-01F		E-BM-AC-01F		E-ME-AC-01F	E-MI-AS-IR		E-BM-AS-PS		E-BM-AES	E-RI-AEB	E-RI-AES
Type	Analog					Digital						
Voltage supply (V$_{DC}$)	12	24	12	24	24	12	24	12	24	24	24	
Valve coil option	/6	std	/6	std	std	/6	std	/6	std	std	std	
Format	plug-in to solenoid		DIN 43700 UNDECAL		EUROCARD	plug-in to solenoid		DIN-rail panel			Integral to valve	
Data sheet	G010		G025		G035	G020		G030		GS050	GS115	

Note: for main and communication connector see sections 12, 13

Hydraulic symbol

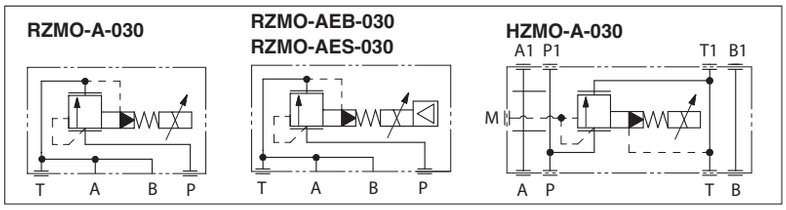

3 GENERAL NOTES

RZMO-A* and HZMO-A proportional valves are CE marked according to the applicable Directives (e.g. Immunity/Emission EMC Directive and Low Voltage Directive).

Installation, wirings and start-up procedures must be performed according to the general prescriptions shown in table F003 and in the installation notes supplied with relevant components.

4 FIELDBUS - only for AES

Fieldbus allows the direct communication of the proportional valve with machine control unit for digital reference signal, diagnostics and settings of functional parameters. Analog reference signal remain available on the main connector for quick commissioning and maintenance. For detailed information about fieldbus features and specification see tech table **GS510**.

5 MAIN CHARACTERISTICS - based on mineral oil ISO VG 46 at 50 °C

Assembly position / location	Any position			
Subplate surface finishing	Roughness index Ra 0,4 - flatness ratio 0,01/100 (ISO 1101)			
MTTF valves according to EN ISO 13849	75 years, see technical table P007			
Ambient temperature range	**A**: **standard** = -20°C ÷ +70°C, **/BT** option = -40°C ÷ +60°C **AEB, AES**: **standard** = -20°C ÷ +60°C, **/BT** option = -40°C ÷ +60°C			
Storage temperature range	**A**: **standard** = -20°C ÷ +80°C, **/BT** option = -40°C ÷ +70°C **AEB, AES**: **standard** = -20°C ÷ +70°C, **/BT** option = -40°C ÷ +70°C			
Coil resistance R at 20°C	Standard = 3 ÷ 3,3 Ω	Option /6 = 2 ÷ 2,2 Ω	Option /18 = 13 ÷ 13,4 Ω	
Max. solenoid current	Standard = 2,6 A	Option /6 = 3,25 A	Option /18 = 1,5 A	
Max. power	**A** = 30 Watt **AEB, AES** = 50 Watt			
Insulation class	H (180°) Due to the occuring surface temperatures of the solenoid coils, the European standards ISO 13732-1 and EN982 must be taken into account			
Protection degree to DIN EN60529	IP66/67 with mating connectors			
Tropicalization (only AEB, AES)	Tropical coating on electronics PCB			
Duty factor	Continuous rating (ED=100%)			
EMC, climate and mechanical load	See technical table G004			
Communication interface (only AEB, AES)	USB Atos ASCII coding	CANopen EN50325-4 + DS408	PROFIBUS DP EN50170-2/IEC61158	EtherCAT IEC 61158
Communication physical layer (only AEB, AES)	not insulated USB 2.0 + USB OTG	optical insulated CAN ISO11898	optical insulated RS485	Fast Ethernet, insulated 100 Base TX

Max regulated pressure	[bar]	**50**	**100**	**210**	**315**	**350**
Min. regulated pressure	[bar]	see min. pressure / flow diagrams at sect. 7				
Max. pressure at port P	[bar]	350				
Max. pressure at port T	[bar]	210				
Min. ÷ Max. flow	[l/min]	2,5 ÷ 40				
Response time 0-100% step signal **(1)** (depending on installation)	[ms]	≤ 60				
Hysteresis	[% of the max pressure]	≤ 2				
Linearity	[% of the max pressure]	≤ 3				
Repeatability	[% of the max pressure]	≤ 2				

(1) Average response time value; the pressure variation in consequence of a modification of the reference input signal to the valve is affected by the stiffness of the hydraulic circuit: greater is the stiffness of the circuit, faster is the dynamic response.

6 SEALS AND HYDRAULIC FLUID - for other fluids not included in below table, consult our technical office

Seals, recommended fluid temperature	NBR seals (standard) = -20°C ÷ +60°C, with HFC hydraulic fluids = -20°C ÷ +50°C FKM seals (/PE option) = -20°C ÷ +80°C HNBR seals (/BT option) = -40°C ÷ +60°C, with HFC hydraulic fluids = -40°C ÷ +50°C		
Recommended viscosity	20 ÷ 100 mm²/s - max allowed range 15 ÷ 380 mm²/s		
Fluid contamination class	ISO 4406 class 20/18/15 NAS 1638 class 9, in line filters of 10 μm (β10 ≥75 recommended)		
Hydraulic fluid	**Suitable seals type**	**Classification**	**Ref. Standard**
Mineral oils	NBR, FKM, HNBR	HL, HLP, HLPD, HVLP, HVLPD	DIN 51524
Flame resistant without water	FKM	HFDU, HFDR	ISO 12922
Flame resistant with water	NBR, HNBR	HFC	

7 DIAGRAMS (based on mineral oil ISO VG 46 at 50 °C)

1 Regulation diagrams
with flow rate Q = 10 l/min

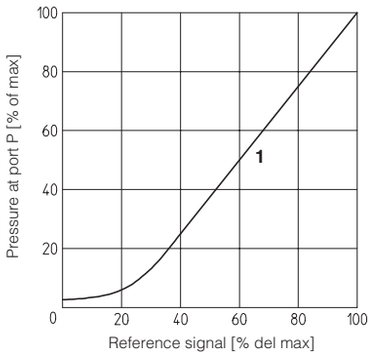

2 Pressure/flow diagrams
with reference signal set at Q = 10 l/min

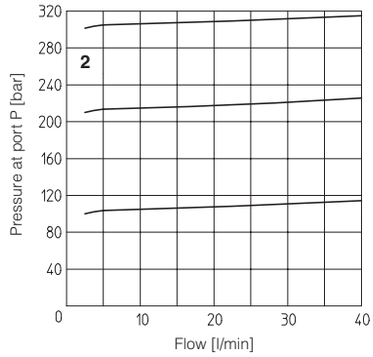

3-4 Min. pressure/flow diagrams
with zero reference signal

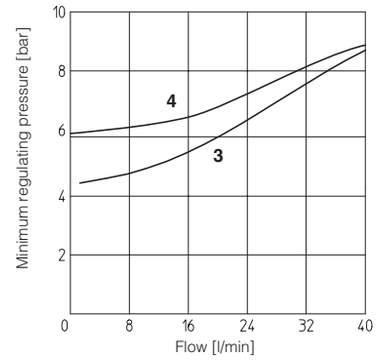

3 = All the models (except /350)
4 = All the models (only /350)

Note:
The presence of counter pressure at port T can affect the pressure regulation and the minimum pressure.

8 OPTIONS for -A

8.1 Coil voltage

Option /6 optional coil to be used with Atos drivers with power supply 12 VDC
Option /18 optional coil to be used with electronic drivers not supplied by Atos

9 ELECTRONIC OPTIONS - for AEB and AES

Standard driver execution provides on the 7 pin main connector:

Power supply - 24 VDC must be appropriately stabilized or rectified and filtered; a 2,5 A fuse time lag is required in series to each driver power supply. Apply at least a 10000 μF/40 V capacitance to single phase rectifiers or a 4700 μF/40 V capacitance to three phase rectifiers

Reference input signal - analog differential input with 0÷+10 VDC nominal range (pin D, E), proportional to desired valve pressure regulation

Monitor output signal - analog output signal proportional to the actual valve's coil current (1V monitor = 1A coil current)

Note: a minimum booting time of 500 ms has be considered from the driver energizing with the 24 VDC power supply before the valve has been ready to operate. During this time the current to the valve coils is switched to zero.

9.1 Option /I

It provides 4 ÷ 20 mA current reference signal, instead of the standard 0÷+10 VDC.

Input signal can be reconfigured via software selecting between voltage and current, within a maximum range of ±10 V or ±20 mA.

It is normally used in case of long distance between the machine control unit and the valve or where the reference signal can be affected by electrical noise; the valve functioning is disabled in case of reference signal cable breakage

9.2 Option /Q

To enable the driver, supply 24 VDC on pin C referred to pin B: Enable input signal allows to enable/disable the current supply to the solenoid, without removing the electrical power supply to the driver; it is used to maintain active the communication and the other driver functions when the valve has to be disabled. This condition does not comply with European Norms EN13849-1 (ex EN954-1).

9.3 Option /Z

It provides, on the 12 pin main connector, the following additional features:

Enable Input Signal

To enable the driver, supply 24 VDC on pin 3 referred to pin 2: Enable input signal allows to enable/disable the current supply to the solenoid, without removing the electrical power supply to the driver; it is used to maintain active the communication and the other driver functions when the valve has to be disabled. This condition does not comply with European Norms EN13849-1 (ex EN954-1).

Fault Output Signal

Fault output signal indicates fault conditions of the driver (solenoid short circuits/not connected, reference signal cable broken for 4÷20mA input, etc.). Fault presence corresponds to 0 VDC, normal working corresponds to 24 VDC (pin 11 referred to pin 2): Fault status is not affected by the Enable input signal

Power supply for driver's logics and communication

Separate power supply (pin 9,10) allow to cut solenoid power supply (pin 1,2) while maintaining active diagnostics, serial and fieldbus communication.

A safety fuse is required in series to each driver power supply: 500 mA fast fuse.

9.4 Possible combined options: /IQ, /IZ

10 PROGRAMMING TOOLS - see tech table GS500

Valve's functional parameters and configurations, can be easily set and optimized using Atos E-SW programming software connected via USB port to the digital driver. For fieldbus versions, the software permits valve's parameterization through USB port also if the driver is connected to the central machine unit via fieldbus.

The software is available in different versions according to the driver's options:

E-SW-BASIC	support:	NP (USB)	PS (Serial)	IR (Infrared)
E-SW-FIELDBUS	support:	BC (CANopen)	BP (PROFIBUS DP)	EH (EtherCAT)
		EW (POWERLINK)	EI (EtherNet/IP)	
E-SW-*/PQ	support:	valves with SP, SF, SL alternated control (e.g. E-SW-BASIC/PQ)		

WARNING: drivers USB port is not isolated!
The use of isolator adapter is highly recommended for PC protection (see table **GS500**)

USB connection

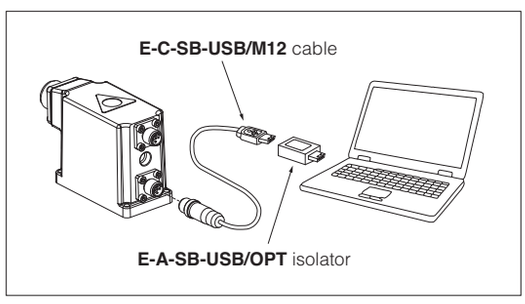

11 ELECTRONIC CONNECTIONS

11.1 Main connector signals - 7 pin - **standard** and **/Q** option - **RZMO-AEB** and **RZMO-AES** (A1)

PIN	Standard	/Q	TECHNICAL SPECIFICATIONS	NOTES
A	**V+**		Power supply 24 VDC Rectified and filtered: VRMS = 20 ÷ 32 VMAX (ripple max 10 % VPP)	Input - power supply
B	**V0**		Power supply 0 VDC	Gnd - power supply
C	**AGND**		Analog ground	Gnd - analog signal
		ENABLE	Enable (24 VDC) or disable (0 VDC) the driver, referred to V0	Input - on/off signal
D	**INPUT+**		Pressure reference input signal: ±10 VDC / ±20 mA maximum range Defaults are 0 ÷ 10 VDC for standard and 4 ÷ 20 mA for /I option	Input - analog signal **Software selectable**
E	**INPUT-**		Negative reference input signal for P_INPUT+	Input - analog signal
F	**MONITOR** referred to: AGND | V0		Pressure monitor output signal: ±5 VDC maximum range Default is 0 ÷ 5 VDC (1V = 1A)	Output - analog signal **Software selectable**
G	**EARTH**		Internally connected to driver housing	

11.2 Main connector signals - 12 pin - **/Z** option - **RZMO-AEB** and **RZMO-AES** (A2)

PIN	/Z	TECHNICAL SPECIFICATIONS	NOTES
1	**V+**	Power supply 24 VDC Rectified and filtered: VRMS = 20 ÷ 32 VMAX (ripple max 10 % VPP)	Input - power supply
2	**V0**	Power supply 0 VDC	Gnd - power supply
3	**ENABLE**	Enable (24 VDC) or disable (0 VDC) the driver, referred to V0	Input - on/off signal
4	**INPUT+**	Pressure reference input signal: ±10 VDC / ±20 mA maximum range Defaults are 0 ÷ 10 VDC for standard and 4 ÷ 20 mA for /I option	Input - analog signal **Software selectable**
5	**INPUT-**	Negative reference input signal for P_INPUT+	Input - analog signal
6	**MONITOR**	Pressure monitor output signal: ±5 VDC maximum range Defaults is 0 ÷ 5 VDC (1V = 1A)	Output - analog signal **Software selectable**
7	**NC**	Do not connect	
8	**NC**	Do not connect	
9	**VL+**	Power supply 24 VDC for driver's logic and communication	Input - power supply
10	**VL0**	Power supply 0 VDC for driver's logic and communication	Gnd - power supply
11	**FAULT**	Fault (0 VDC) or normal working (24 VDC), referred to V0	Output - on/off signal
PE	**EARTH**	Internally connected to driver housing	

11.3 Communication connectors - RZMO-AEB (B) and RZMO-AES (B) (C)

(B) **USB connector - M12 - 5 pin** always present

PIN	SIGNAL	TECHNICAL SPECIFICATION (1)
1	**+5V_USB**	Power supply
2	**ID**	Identification
3	**GND_USB**	Signal zero data line
4	**D-**	Data line -
5	**D+**	Data line +

(C1) **BC fieldbus execution, connector - M12 - 5 pin (2)**

PIN	SIGNAL	TECHNICAL SPECIFICATION (1)
1	**CAN_SHLD**	Shield
2	**NC**	do not connect
3	**CAN_GND**	Signal zero data line
4	**CAN_H**	Bus line (high)
5	**CAN_L**	Bus line (low)

(C2) **BP fieldbus execution, connector - M12 - 5 pin (2)**

PIN	SIGNAL	TECHNICAL SPECIFICATION (1)
1	**+5V**	Termination supply signal
2	**LINE-A**	Bus line (high)
3	**DGND**	Data line and termination signal zero
4	**LINE-B**	Bus line (low)
5	**SHIELD**	

(C3) (C4) **EH fieldbus execution, connector - M12 - 4 pin (2)**

PIN	SIGNAL	TECHNICAL SPECIFICATION (1)
1	**TX+**	Transmitter
2	**RX+**	Receiver
3	**TX-**	Transmitter
4	**RX-**	Receiver
Housing	**SHIELD**	

Notes: (1) shield connection on connector's housing is recommended **(2)** only for **AES** execution

11.4 Solenoid connection - only for **RZMO-A** and **HZMO-A**

PIN	SIGNAL	TECHNICAL SPECIFICATION	Connector code 666
1	**COIL**	Power supply	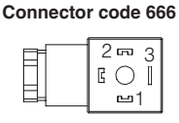
2	**COIL**	Power supply	
3	**GND**	Ground	

11.5 Connections layout - only for **AEB** and **AES**

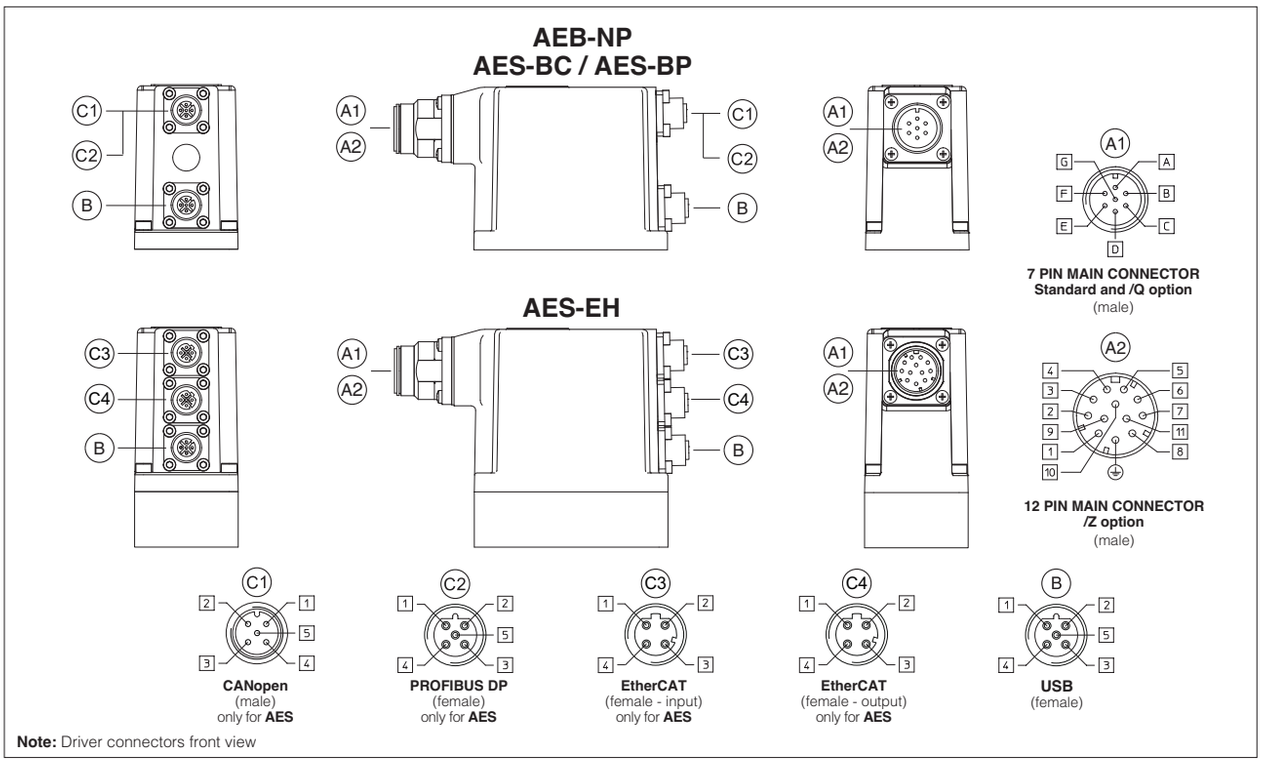

Note: Driver connectors front view

12 CONNECTORS

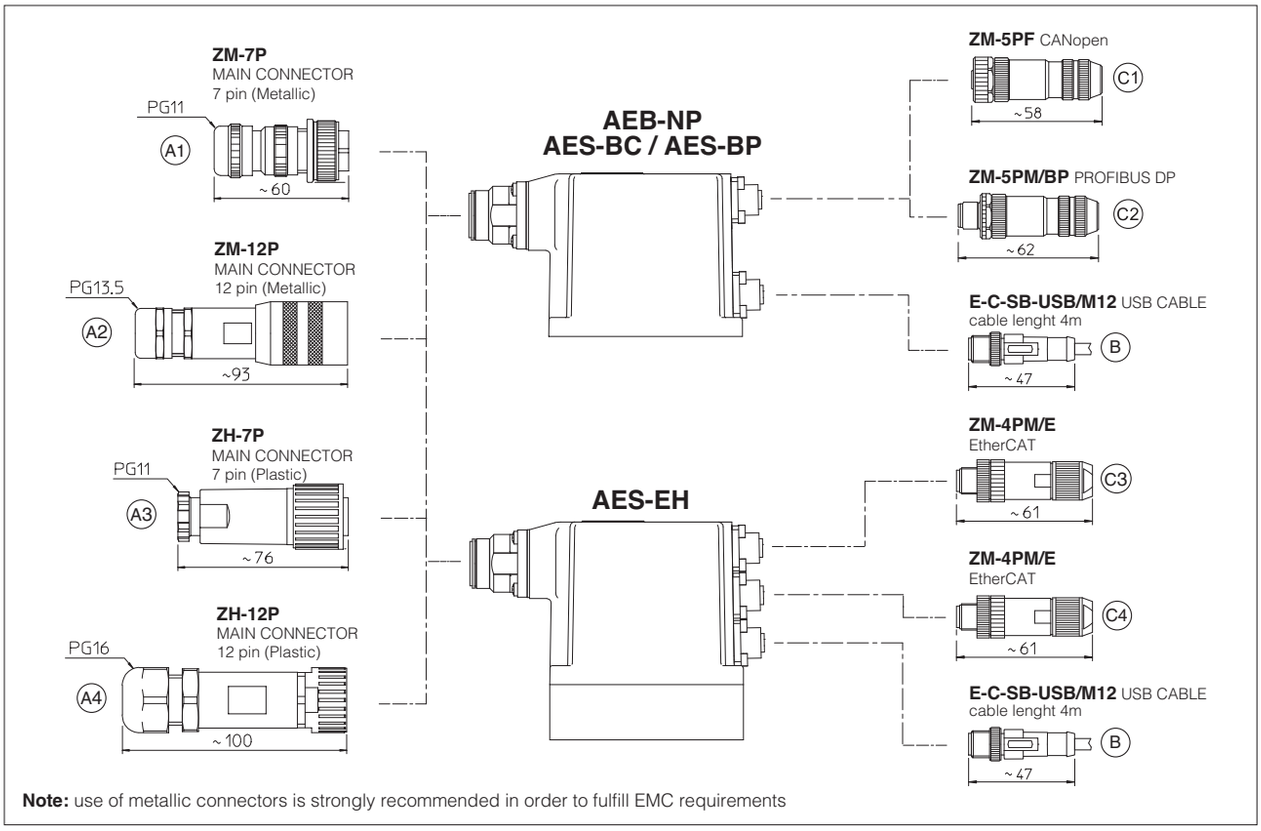

Note: use of metallic connectors is strongly recommended in order to fulfill EMC requirements

13 MODEL CODES OF MAIN CONNECTORS AND COMMUNICATION CONNECTORS - to be ordered separately

VALVE VERSION	A (1) Power supply	AEB AES	AEB/Z AES/Z	BC - CANopen	BP - PROFIBUS DP	EH - EtherCAT
CONNECTOR CODE	666	ZM-7P (A1)	ZM-12P (A2)	ZM-5PF (C1)	ZM-5PM/BP (C2)	ZM-4PM/E (C3)
		ZH-7P (A3)	ZH-12P (A4)			ZM-4PM/E (C4)
PROTECTION DEGREE	IP67	IP67				
DATA SHEET	K500	GS115, K500				

(1) Connectors supplied with the valve

only for **AES**

14 INSTALLATION DIMENSIONS [mm]

ISO 4401: 2000
Mounting surface: 4401-03-02-0-05
(see table P005)
Fastening bolts:
4 socket head screws M5X50 bolts class 12.9
Tightening torque = 8 Nm
Seals: 4 OR 108
Ports P, T: Ø = 7,5 mm
Ports A, B connected to port T

RZMO-A

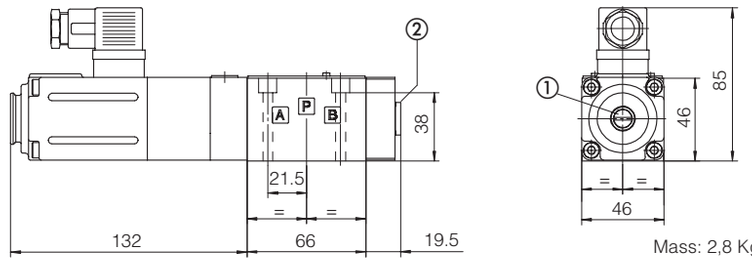

Mass: 2,8 Kg

RZMO-AEB

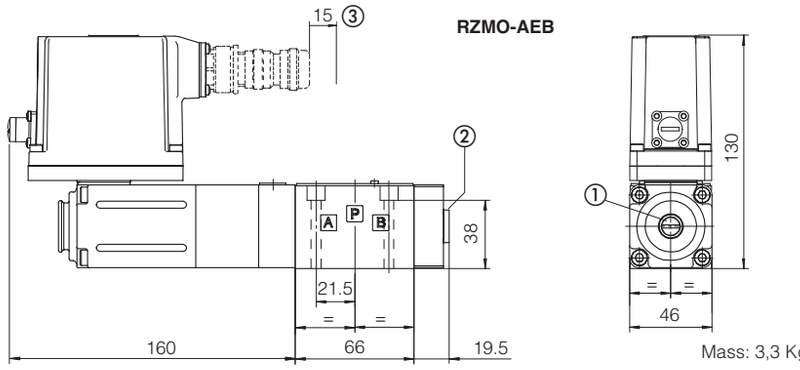

Mass: 3,3 Kg

RZMO-AES-BP
RZMO-AES-BC

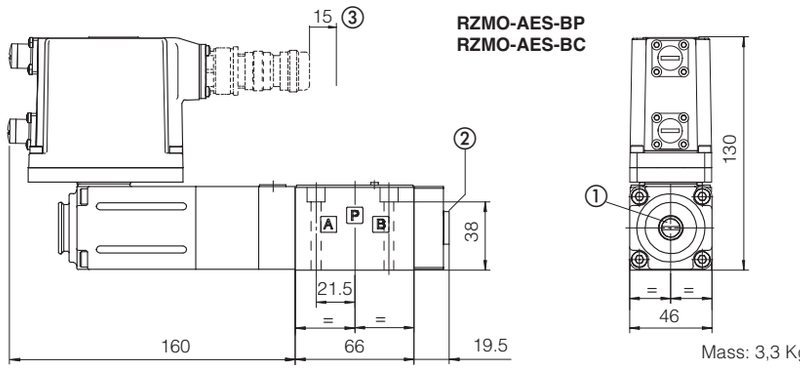

Mass: 3,3 Kg

RZMO-AES-EH*

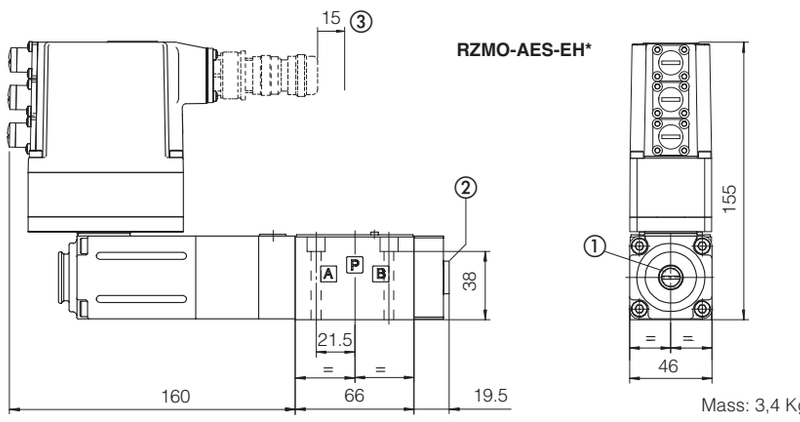

Mass: 3,4 Kg

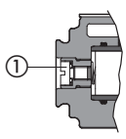

ISO 4401: 2000
Mounting surface: 4401-03-02-0-05
(see table P005)
Seals: 4 OR 108
Ports P, T, A, B: Ø = 6.5 mm

HZMO-A

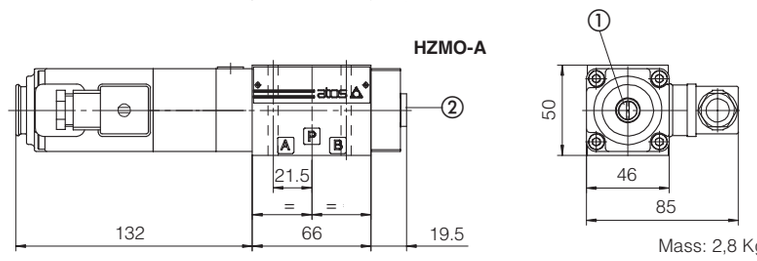

Mass: 2,8 Kg

① = Screw for air bleeding: at the first valve commissioning the air eventually trapped inside the solenoid must be bled-off through the screw ①
② = Pressure gauge port = G1/4”
③ = Space to remove the 7 or 12 pin main connector. For main and communication connectors see section 12, 13