Check valve, pilot operated

Type Z2S

RE 21558
Edition: 2018-06
Replaces: 07.10

H7685

- Size 16
- Component series 5X
- Maximum operating pressure 315 bar
- Maximum flow 300 l/min

Features

- Sandwich plate valve for use in vertical stackings
- Porting pattern according to ISO 4401-07-07-0-05
- For the leakage-free blocking of one or two actuator ports, optional different cracking pressures
- With pre-opening
- Check valve installation sets available individually
- Corrosion-protected design

Contents

Ordering code

01	02	03	04		05		06	07	08	09
Z2S	**16**			**–**	**5X**	**/**				*****

01	Check valve, sandwich plate design	**Z2S**

02	Size 16	**16**

Leakage-free blocking

03	In channel A and B	**–**
	In channel A	**A**
	In channel B	**B**

Cracking pressure

04	3 bar	**1**
	5 bar	**2**
	7.5 bar	**3**
	10 bar	**4**

05	Component series 50 ... 59 (50 ... 59: unchanged installation and connection dimensions)	**5X**

Seal material

06	NBR seals	**no code**
	FKM seals	**V**
	Observe compatibility of seals with hydraulic fluid used. (Other seals upon request)	

Corrosion resistance (outside; thick film passivation according to DIN 50979 – Fe//Zn8//Cn//T0)

07	None (valve housing primed)	**no code**
	Improved corrosion protection (240 h salt spray test according to EN ISO 9227)	**J3**

Special version

08	Standard	**no code**
	Control open by external port G1/4 (only version "A" or "B")	**SO40**
	Control spool unloaded to port “T”	**SO60**

09	Further details in the plain text	

Symbols: Examples (① = component side, ② = plate side)

Version **“A”**

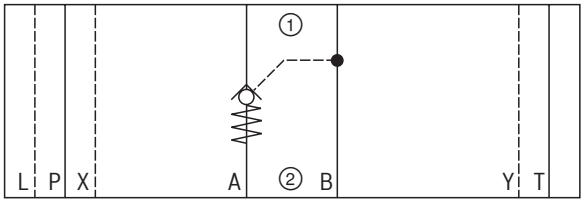

Version **“–”**

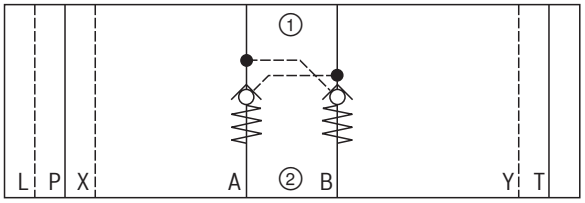

Version **“B”**

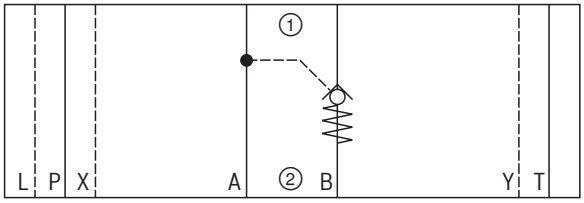

Version “**A**...**SO40”**

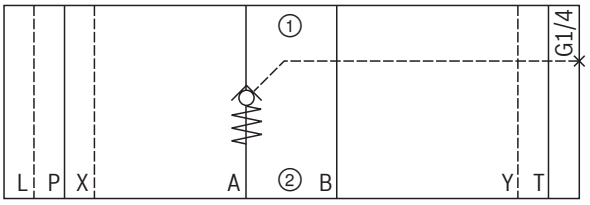

Version **“A**...**SO60”**

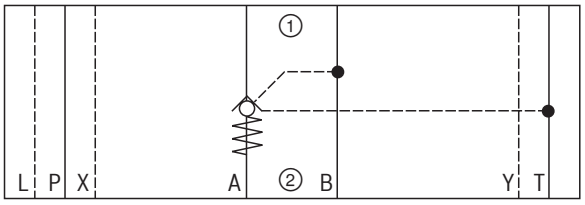

Function, sections, circuit example

The isolator valve type Z2S is a releasable check valve in sandwich plate design.
It is used for the leakage-free blocking of one or two actuator ports, also in case of longer standstill times.
In direction A① to A② or B① to B②, there is a free flow; in the opposite direction, the flow is blocked.
If, for example, there is a flow through the valve in direction A① to A②, the control spool (1) is moved in the direction of the B side, opens the ball seat valve (2) and then pushes the poppet (3) off its seat. Hydraulic fluid can now flow from B② to B①.
In order to allow the ball seat valve (2) to be safely closed, the control spool (1) must be hydraulically unloaded (see circuit example).

Pre-opening

- Due to the pre-opening, there is a damped decompression of the pressurized liquid. Thus, possible switching shocks are avoided.
- The two-stage set-up with an increased control open ratio means even low pilot pressure can be unloaded securely.

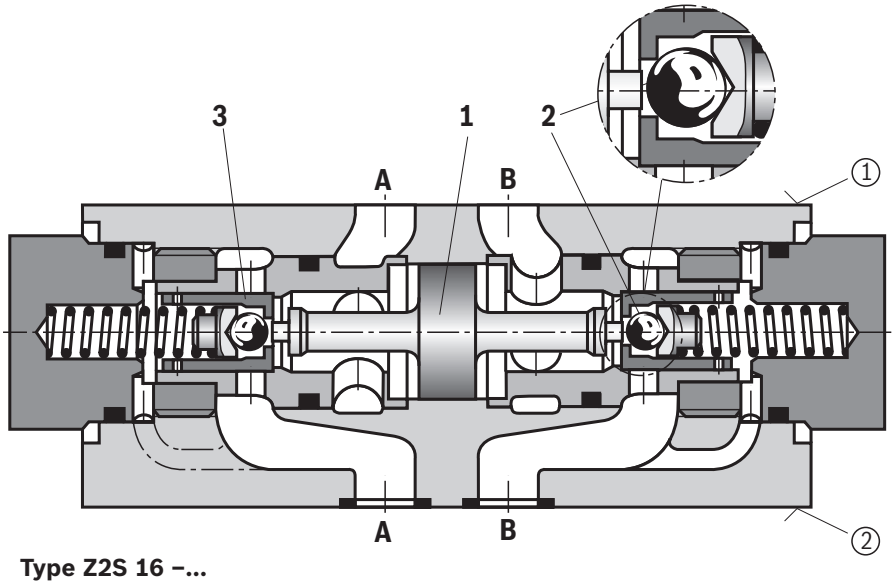

Type Z2S 16 –...

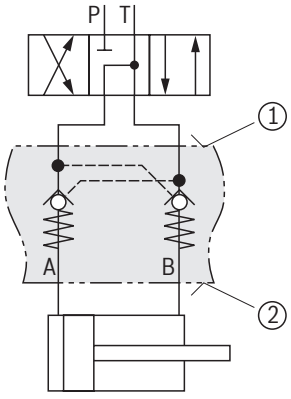

Circuit example, schematic

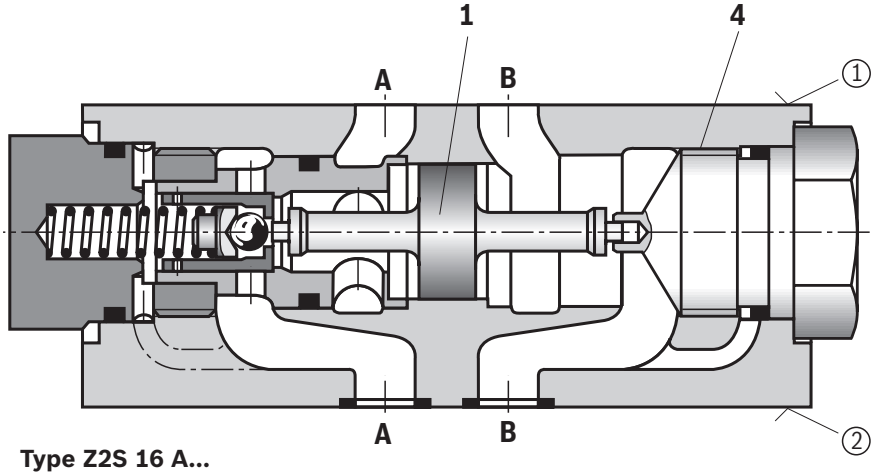

Type Z2S 16 A...

① = component side
② = plate side

1 Control spool, area A_2
2 Ball, area A_3
3 Poppet, area A_1
4 Stop

Function, sections

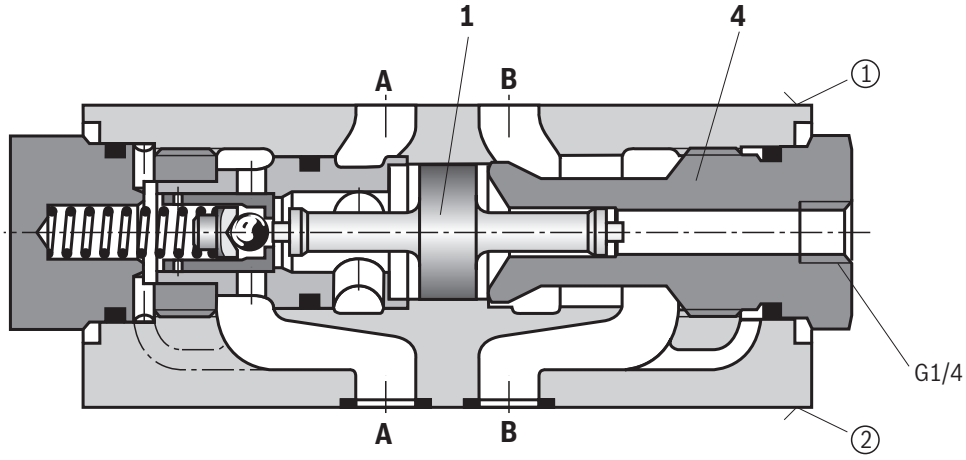

Type Z2S 16 A...SO40

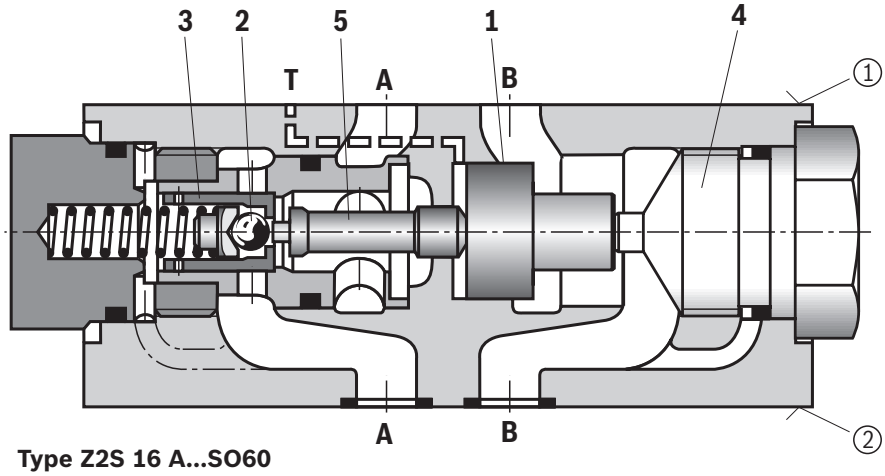

Type Z2S 16 A...SO60

① = component side
② = plate side

1 Control spool, area $\boldsymbol{A}_2$
2 Ball, area $\boldsymbol{A}_3$
3 Poppet, area $\boldsymbol{A}_1$
4 Stop
5 Control spool, area $\boldsymbol{A}_4$

Technical data
(For applications outside these parameters, please consult us!)

general		
Weight	kg	approx. 6.5
Installation position		any
Ambient temperature range	°C	–30 ... +80 (NBR seals) –20 ... +80 (FKM seals)
$MTTF_d$ value according to EN ISO 13849	Years	150 (for further details see data sheet 08012)

hydraulic			
Maximum operating pressure		bar	315
Cracking pressure in free direction			see characteristic curves page 7
Maximum flow		l/min	300
Direction of flow			see symbols page 3
Hydraulic fluid			see table below
Hydraulic fluid temperature range (at the valve working ports)		°C	–30 ... +80 (NBR seals) –20 ... +80 (FKM seals)
Viscosity range		mm^2/s	2.8 ... 500
Maximum admissible degree of contamination of the hydraulic fluid, cleanliness class according to ISO 4406 (c)			class 20/18/15 [1]
Area ratio	▶ With pre-opening		A_3/A_2 ~ 1/12 (see sectional drawing page 4 and 5)
	▶ Version "SO60"		A_1/A_4 ~ 1/7 (see sectional drawing page 5)

Hydraulic fluid		**Classification**	**Suitable sealing materials**	**Standards**	**Data sheet**
Mineral oils		HL, HLP, HLPD, HVLP, HVLPD	NBR, FKM	DIN 51524	90220
Bio-degradable	▶ Insoluble in water	HETG [2]	FKM	ISO 15380	90221
		HEES [2]	FKM		
	▶ Soluble in water	HEPG [2]	FKM	ISO 15380	
Flame-resistant	▶ water-free	HFDU (glycol base)	FKM	ISO 12922	90222
		HFDU (ester base) [2]	FKM		
		HFDR	FKM		
	▶ containing water	HFC (Fuchs Hydrotherm 46M, Petrofer Ultra Safe 620) [2]	NBR	ISO 12922	90223

☞ **Important notices on hydraulic fluids:**
- ▶ For further information and data on the use of other hydraulic fluids, please refer to the data sheets above or contact us.
- ▶ There may be limitations regarding the technical valve data (temperature, pressure range, life cycle, maintenance intervals, etc.).
- ▶ The ignition temperature of the hydraulic fluid used must be 50 K higher than the maximum surface temperature.
- ▶ **Flame-resistant – containing water**:
  - – Maximum pressure differential 210 bar, otherwise, increased cavitation erosion
  - – Life cycle as compared to operation with mineral oil HL, HLP 30 ... 100%
  - – Maximum hydraulic fluid temperature 60 °C
- ▶ **Bio-degradable and flame-resistant:** If this hydraulic fluid is used, small amounts of dissolved zinc may get into the hydraulic system.

[1] The cleanliness classes specified for the components must be adhered to in hydraulic systems. Effective filtration prevents faults and simultaneously increases the life cycle of the components.
Available filters can be found at www.boschrexroth.com/filter.

[2] Not recommended for corrosion-protected version “J3” (contains zinc)

☞ **Notice:**
Selection of optimal sealing material (see ordering code page 2) also depends on the type of hydraulic fluid used.

Characteristic curves
(measured with HLP46, ϑ_{oil} = 40 ±5 °C)

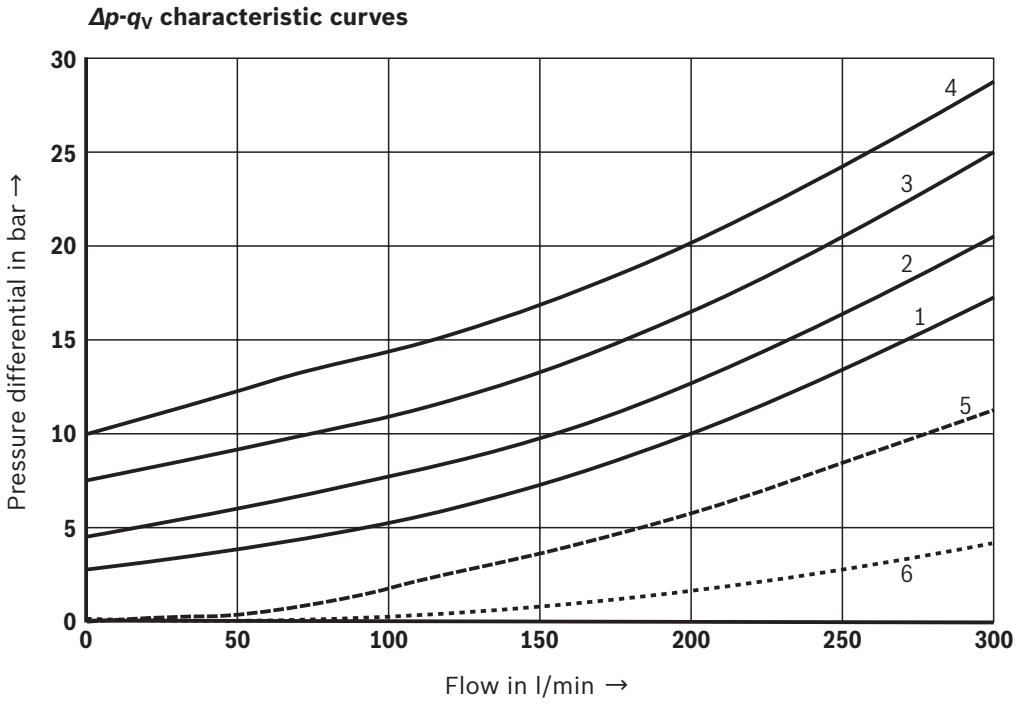

Cracking pressure:

1 3 bar
2 5 bar
3 7.5 bar
4 10 bar
5 Free flow (without check valve use), version "A" or "B"
6 Only housing

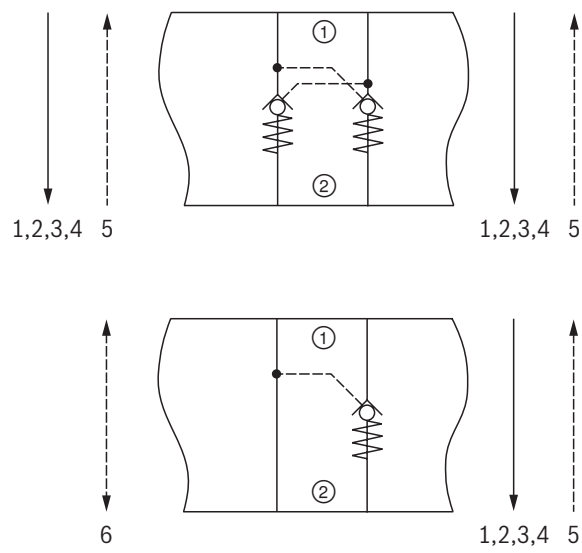

Dimensions
(dimensions in mm)

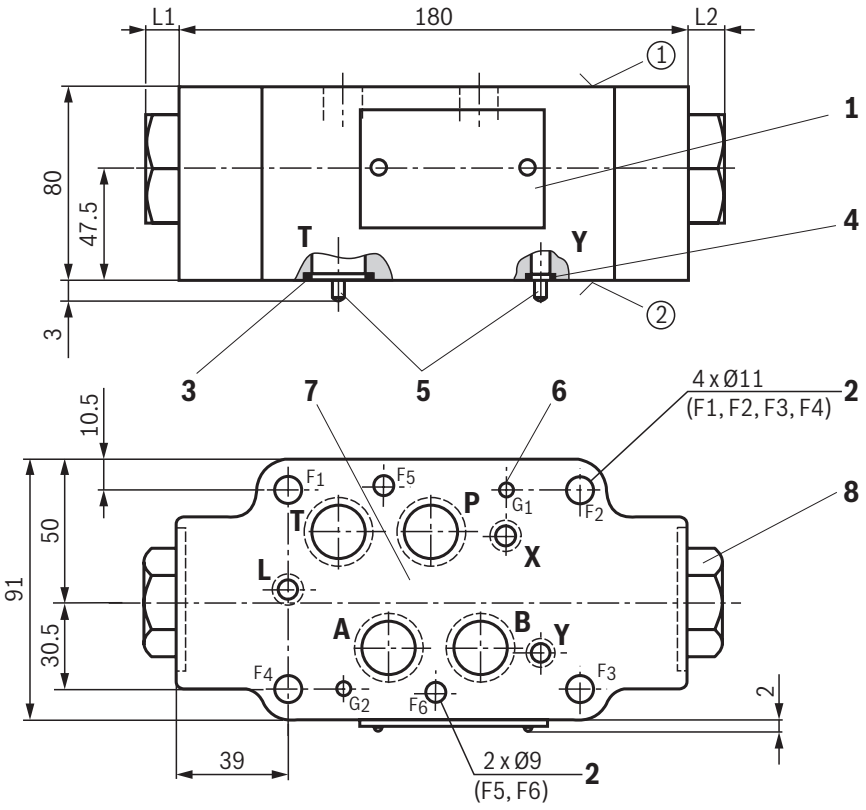

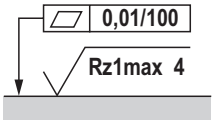

Required surface quality
of the valve contact surface

① component side
② plate side

1 Name plate
2 Through holes for valve mounting
3 Identical seal rings for ports A, B, P, T
4 Identical seal rings for ports X, Y, L
5 Locking pins
6 Locating holes
7 Porting pattern according to ISO 4401-07-07-0-05
8 Plug screw SW41, tightening torque M_A = 70 Nm

Valve mounting screws (separate order)
4 hexagon socket head cap screws ISO 4762 - M10 - 10.9
2 hexagon socket head cap screws ISO 4762 - M6 - 10.9

☞ **Notice:**
Length and tightening torque of the valve mounting screws must be calculated according to the components mounted under and over the sandwich plate valve.

Special version	**Cracking pressure** in bar	**Leakage-free blocking** in channel	**L1**	**L2**
“no code”	3; 5	„–“	10	10
	7.5; 10	„–“	36.5	36.5
	3; 5	„A“	10	8.5
	3; 5	„B“	8.5	10
	7.5; 10	„A“	36.5	8.5
	7.5; 10	„B“	8.5	36.5
„SO40“	3; 5	“A”; “B”	10	10
	7.5; 10	„A“	36.5	10
	7.5; 10	„B“	10	36.5
„SO60“	3; 5	„A“	10	8.5
	3; 5	„B“	8.5	10
	7.5; 10	„A“	36.5	8.5
	7.5; 10	„B“	8.5	36.5

Further information

▶ Subplates	Data sheet 45100
▶ Hydraulic fluids on mineral oil basis	Data sheet 90220
▶ Environmentally compatible hydraulic fluids	Data sheet 90221
▶ Flame-resistant, water-free hydraulic fluids	Data sheet 90222
▶ Flame-resistant hydraulic fluids - containing water (HFAE, HFAS, HFB, HFC)	Data sheet 90223
▶ Reliability characteristics according to EN ISO 13849	Data sheet 08012
▶ Hydraulic valves for industrial applications	Operating instructions 07600-B
▶ Selection of filters	www.boschrexroth.com/filter
▶ Information on available spare parts	www.boschrexroth.com/spc

Notes

Bosch Rexroth AG
Industrial Hydraulics
Zum Eisengießer 1
97816 Lohr am Main, Germany
Phone +49 (0) 93 52/ 40 30 20
my.support@boschrexroth.de
www.boschrexroth.de

Bosch Rexroth AG, RD 21558, edition: 2018-06

Notes

Bosch Rexroth AG
Industrial Hydraulics
Zum Eisengießer 1
97816 Lohr am Main, Germany
Phone +49 (0) 93 52 / 40 30 20
my.support@boschrexroth.de
www.boschrexroth.de

Notes

Bosch Rexroth AG
Industrial Hydraulics
Zum Eisengießer 1
97816 Lohr am Main, Germany
Phone +49 (0) 93 52/ 40 30 20
my.support@boschrexroth.de
www.boschrexroth.de

Bosch Rexroth AG, RD 21558, edition: 2018-06