Rexroth
Bosch Group

3/2 and 4/2 directional poppet valve, with solenoid operation, for water emulsions and water

RE 22042/03.07 1/14
Replaces: 22048

Type .-.SE

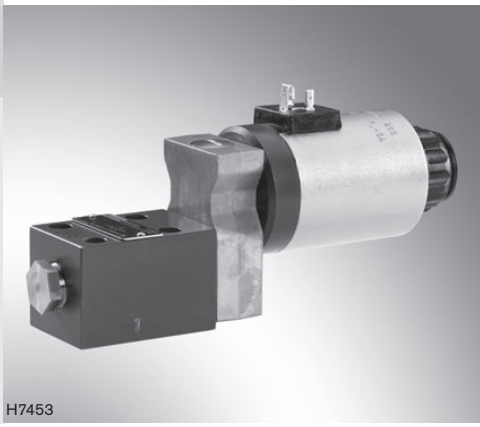

Size 6
Component series 7X
Maximum operating pressue 630 bar
Maximum flow 25 l/min

Table of contents

Contents	Page
Features	1
Ordering code	2
Function, section, symbols	3 to 5
Standard types	6
Technical data	6, 7
Characteristic curves	8
Performance limit	9
General notes	9
Unit dimensions	10 to 13
Throttle insert	14
Check valve insert	14
Mating connectors	14

Information on available spare parts:
www.boschrexroth.com/spc

Features

- Direct operated directional poppet valve with solenoid operation
- Porting pattern to ISO 4401-03-02-0-05 (**with** locating bore)
- Air gap DC solenoid
- Electrical connection as individual connection
- Port is leak-free closed
- Reliable operation even when under pressure over longer periods of time

Ordering code

–	SE	6		7X/				K4				*

Oil-in-water emulsion, water glycol, mineral oil = **E**
Water = **W**

3 main ports = **3**
4 main ports = **4**

Poppet valve, electrically operated

Size 6 = **6**

Main ports	3	4	
Symbols 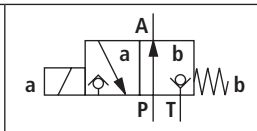	●	–	= **U**
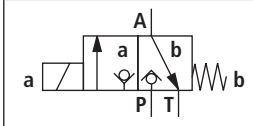	●	–	= **C**
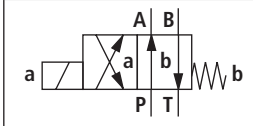	–	●	= **D**
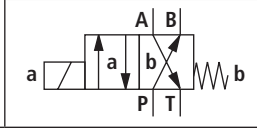	–	●	= **Y**
	● = available		

Component series 70 to 79 = **7X**
(70 to 79: unchanged installation and connection dimensions)

With spring return = **No code**
With detent = **F**

Operating pressure up to 420 bar = **420**
Operating pressure up to 630 bar = **630**

Further details in clear text

No code = Without locating bore
/62 = **With** locating bore and locating pin ISO 8752-3x8-St

Seal material
No code = NBR seals
V = FKM seals
(other seals on request)
⚠ **Important!**
Observe compatibility of seals with hydraulic fluid used!

No code = Without check valve insert, without throttle insert
P = With check valve insert
B08 = Throttle Ø0.8 mm
B10 = Throttle Ø1.0 mm
B12 = Throttle Ø1.2 mm
B15 = Throttle Ø1.5 mm
B18 = Throttle Ø1.8 mm
B20 = Throttle Ø2.0 mm

Electrical connection
K4 [1] **=** Without mating connector
Individual connection with component plug to DIN EN 175301-803

N9 = **With** concealed manual override (standard)
No code = **Without** manual override

G24 = 24 V DC
G205 [2] **=** 205 V DC
G96 = 96 V DC
For further ordering codes for other voltages, see page 7

AC mains (permissible voltage tolerance ± 10%)	**Nominal voltage of the DC solenoid when operated with AC voltage**	**Ordering code**
110 V - 50/60 Hz	96 V	**G96**
120 V - 60 Hz	110 V	**G110**
230 V - 50/60 Hz	205 V	**G205**

[1] Mating connectors must be ordered separately (see page 14).

[2] For connection to AC mains, a DC solenoid **must** be used, which is controlled via a rectifier (see table on the left).

A mating connector with integrated rectifier may be used (separate order, see page 14).

For standard types, see page 6!

Function, section, symbols: 3/2 directional poppet valve

General

Directional valves of type .-.SE are directional poppet valves with solenoid operation. They control the start, stop and direction of a flow.
They basically consist of a housing (1), solenoid (2), a hardened valve system (3), and ball (4) as closing element.

Basic principle

In the starting position, ball (4) is pressed by spring (8) onto the seat, in the operated condition by solenoid (2). The force of solenoid (2) acts via angled lever (5) and ball (6) on the sealed actuating plunger (7). The chamber between the two sealing elements is connected to port P. This ensures that the valve system is pressure-compensated in relation to the actuating forces (solenoid or return spring). The valves can therefore be operated up to 630 bar.

☞ **Note!**

- 3/2 directional seat valves feature a "negative overlap". For this reason, port T must always be connected. This means that during the switching process – when one of the valve seats starts to open until the other valve seat is closed – ports P–A–T are connected to each other. This process takes, however, place in such a short time that it is irrelevant in nearly all applications.
- A manual override allows the valve to be operated without energisation of the solenoid.

⚠ **Important!**

Care must be taken that the specified maximum flow is not exceeded! If required, a throttle insert must be used for limiting the flow (see page 14).

The seat arrangement offers the following options:

Symbol	**"U"**
	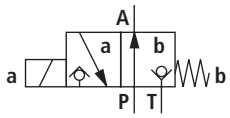
Starting position	P and A connected, T blocked
Operated position	P blocked, A and T connected
Symbol	**"C"**
	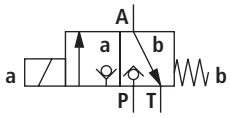
Starting position	P blocked, A and T connected
Operated position	P and A connected, T blocked

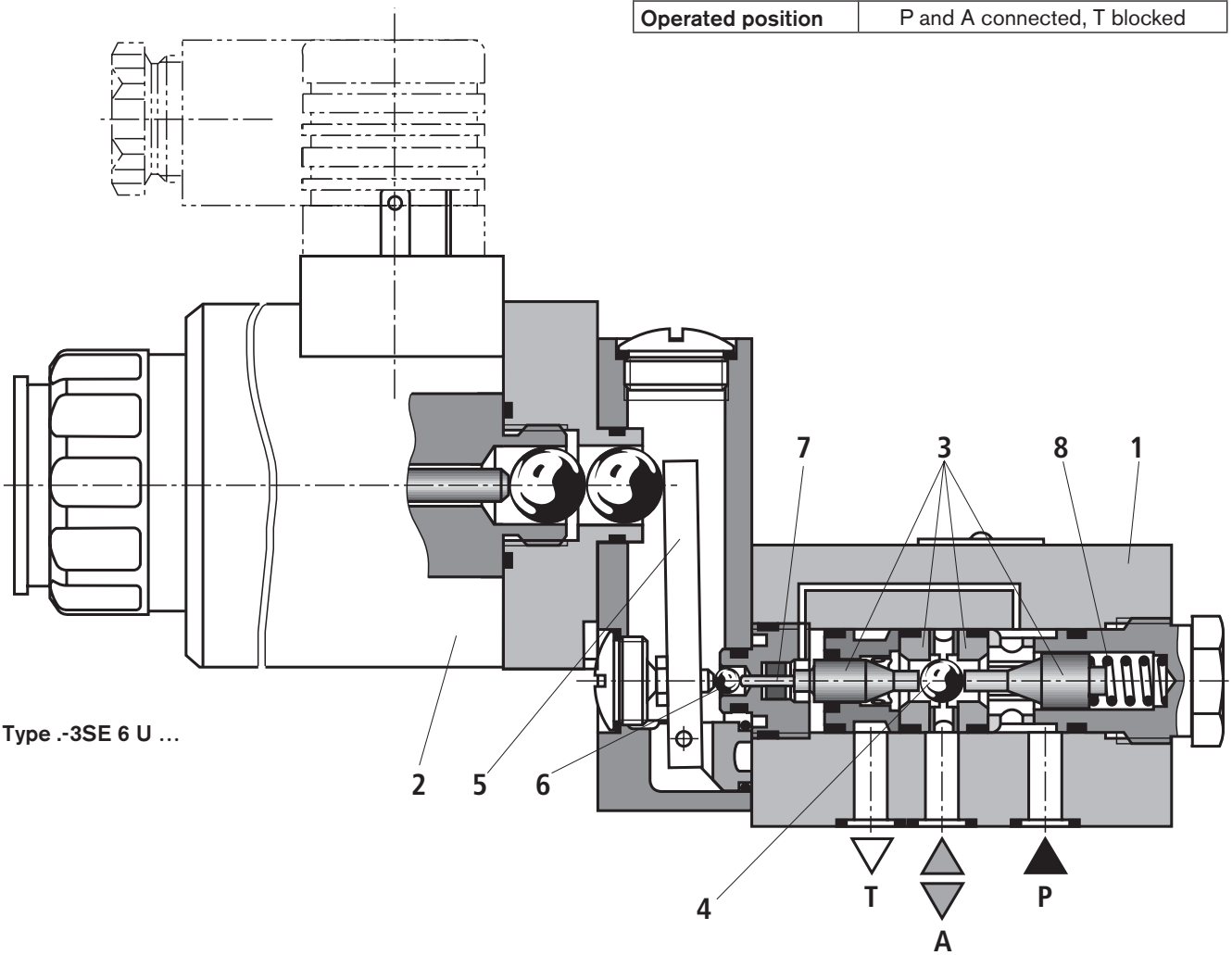

Type .-3SE 6 U …

Function, sections, symbols: 3/2 directional poppet valve – with detent

In principle, the function of this valve corresponds to that of the variant without detent.

The detent allows the valve to remain in the operated position, even when no solenoid is energised. Due to this, it is possible that the valve dwells independently at both positions.

Function of the detent:

Solenoid (2) switches the valve to the position, which is automatically detented. After the switching process was completed, the switching solenoid can be deactivated.

To leave the detented position solenoid (9) must be energised for at least 100 ms. The integrated spring (16) returns the valve to its starting position.

The seat arrangement offers the following options:

Symbol	**"U"**
	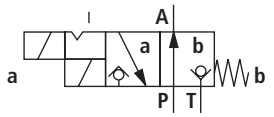
Starting position	P and A connected, T blocked
Operated position	P blocked, A and T connected
Symbol	**"C"**
	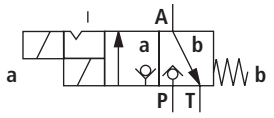
Starting position	P blocked, A and T connected
Operated position	P and A connected, T blocked

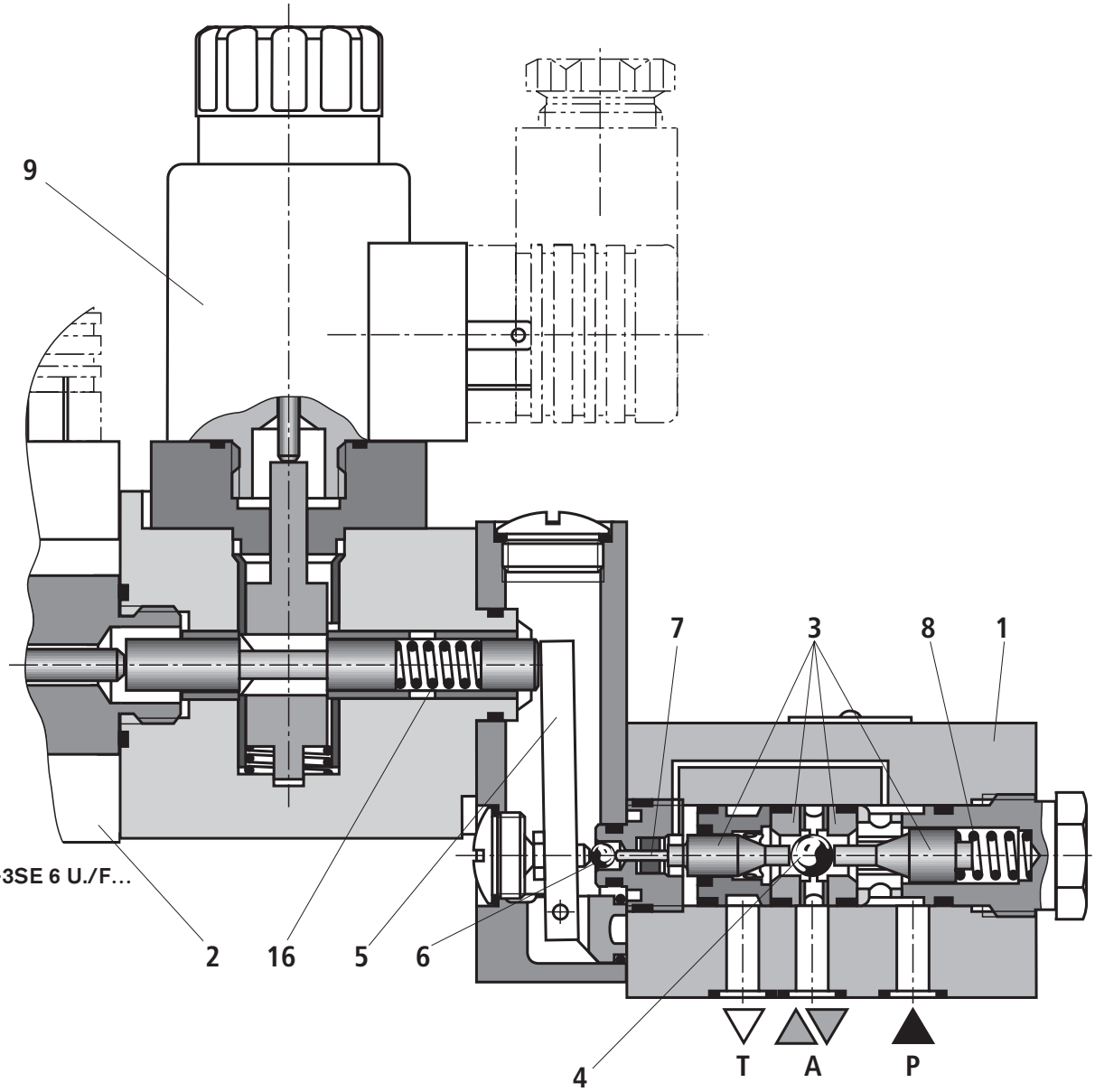

Type .-3SE 6 U./F…

Function, section, symbols: 4/2 directional poppet valve

With the help of a sandwich plate, the **Plus-1 plate**, under the 3/2 directional poppet valve, the function of a 4/2 directional poppet valve can be realised.

Function of the Plus-1 plate:

– Starting position:
The main valve is not operated. Spring (8) holds ball (4.2) on seat (11). Port P is blocked, and A is connected to T. In addition, a pilot line is connected from A to the large area of pilot piston (12), which is hence unloaded to the tank. The pressure applied via P now pushes ball (13) onto seat (14). P is now connected to B, and A to T.

– Transitional position:
When the main valve is operated, ball (4.1) is shifted against spring (8) and pushed onto seat (15). This causes blocking of port T; P, A, and B are briefly connected.

– Operated position:
P is connected to A. Because the pump pressure acts via the large area of pilot piston (12), ball (13) is pushed onto seat (10). Consequently, B is connected to T, and P to A. Ball (13) in the Plus-1 plate has a "positive overlap".

⚠ **Important!**

In order to prevent pressure intensification when using single-rod cylinders, the annulus area of the cylinder must be connected to A.

4/2 directional seat valves with detent analogously to 3/2 directional poppet valve (see page 4).

The use of the Plus-1 plate and the seat arrangement offer the following options:

	Without detent	With detent
Symbol "D"	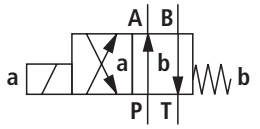	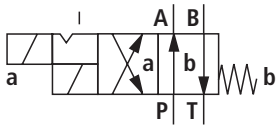
Symbol "Y"	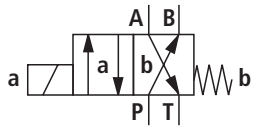	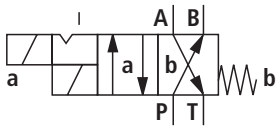

Schematic drawing: Starting position

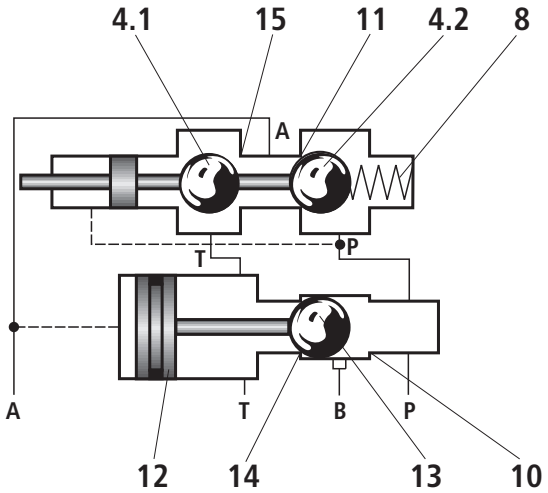

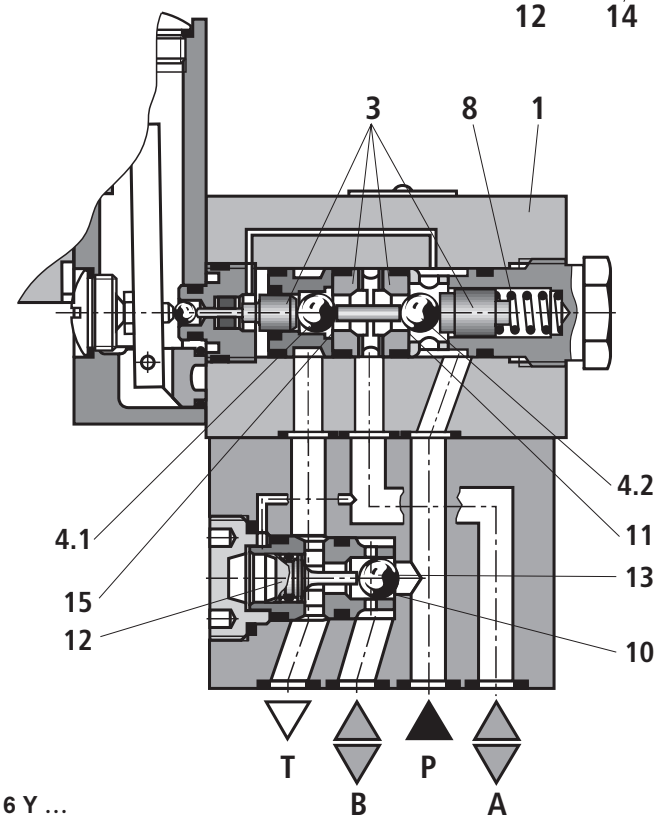

Type .-4SE 6 Y …

Standard types

Type	Material number
W-3SE 6 C7X/420G24N9K4	R901138504
W-3SE 6 U7X/420G24N9K4	R901138702

Type	Material number
E-3SE 6 C7X/420G24N9K4	R901138718
E-3SE 6 C7X/630G24N9K4	R901138758
E-3SE 6 U7X/630G24N9K4	R901138401

Further standard types and components are shown in the EPS (standard price list).

Technical data (for applications outside these parameters, please consult us!)

General

Weight	– 3/2 directional poppet valve	• without detent	kg	3.8
		• with detent	kg	5.6
	– 4/2 directional poppet valve	• without detent	kg	4.6
		• with detent	kg	6.4
Installation position				Optional
Ambient temperature range			°C	5 to 50 (with water, oil-in-water emulsion and water glycol)
			°C	–15 to +50 (with mineral oil)

Hydraulic

Maximum operating pressure		bar	see table “Performance limit” on page 9
Maximum flow		l/min	25
Hydraulic fluid	– Type **W**-.SE 6 …		Water
	– Type **E**-.SE 6 …		Oil-in-water emulsion, water glycol, mineral oil (HL, HLP) to DIN 51524 [1]; fast bio-degradable hydraulic fluids to VDMA 24568 (see also RE 90221); HETG (rape seed oil) [1]; HEPG (polyglycols) [2]; HEES (synthetic esters) [2]; other hydraulic fluids on request
Hydraulic fluid temperature range		°C	5 to 55 (with water, oil-in-water emulsion and water glycol)
		°C	–15 to +80 (with mineral oil)
Viscosity range		mm^2/s	0.6 to 500
Permissible max. degree of contamination of the hydraulic fluid - cleanliness class to ISO 4406 (c)			Class 20/18/15 [3]

[1] Suitable for NBR and FKM seals

[2] Suitable only for FKM seals

[3] The cleanliness classes specified for components must be adhered to in hydraulic systems. Effective filtration prevents malfunction and, at the same time, prolongs the service life of components.
For the selection of filters, see data sheets RE 50070, RE 50076, RE 50081, RE 50086, RE 50087 and RE 50088.

Technical data (for applications outside these parameters, please consult us!)

Electrical

Type of voltage			DC voltage	AC voltage
Available voltages		V	12; 24; 42; 48; 96; 110; 205 (further voltages on request)	Only possible via rectifier (see page 14)
Voltage tolerance (nominal voltage)		%	±10	
Power consumption	– Valve solenoid	W	35	
	– Detent solenoid	W	30	
Duty cycle			S1 (continuous operation)	
Switching time to ISO 6403	ON	ms	40 to 70 (420 bar); 50 to 80 (630 bar)	
	OFF	ms	20 to 30 (420 bar); 15 to 40 (630 bar)	
Maximum switching frequency		1/h	3600	
Maximum coil temperature [4]		°C	150	
Type of protection to EN 60529			IP 65 with mating connector mounted and locked	

[4] Due to the surface temperatures of solenoid coils, European standards EN 563 and EN 982 must be observed!

For the electrical connection, the protective earth conductor (PE ⏚) must be properly connected.

Characteristic curves (measured with HLP46, ϑ_{oil} = 40 °C ± 5 °C)

Δp-q_V characteristic curve
3/2 directional poppet valve

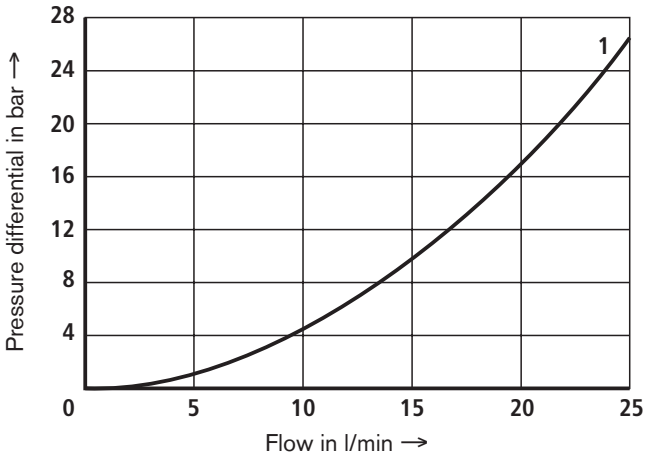

1 A to T
P to A

Δp-q_V characteristic curves
4/2 directional poppet valve

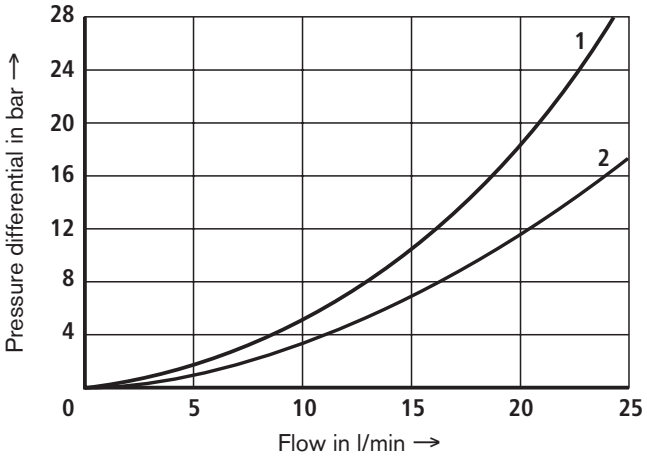

1 A to T
P to A

2 B to T
P to B

Δp-q_V characteristic curve
Check valve insert

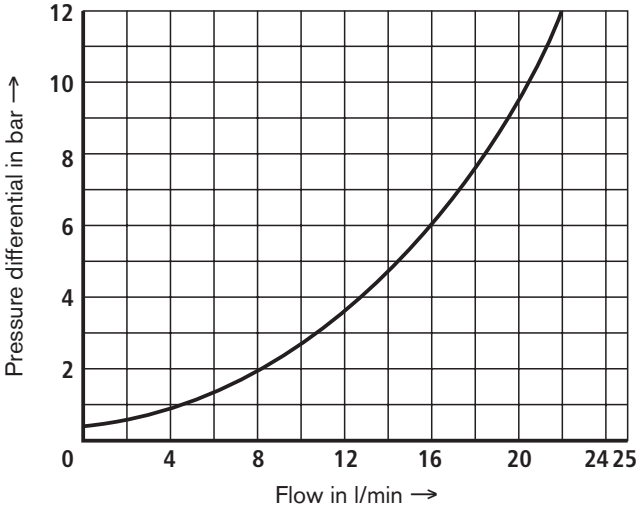

Δp-q_V characteristic curves
Throttle insert

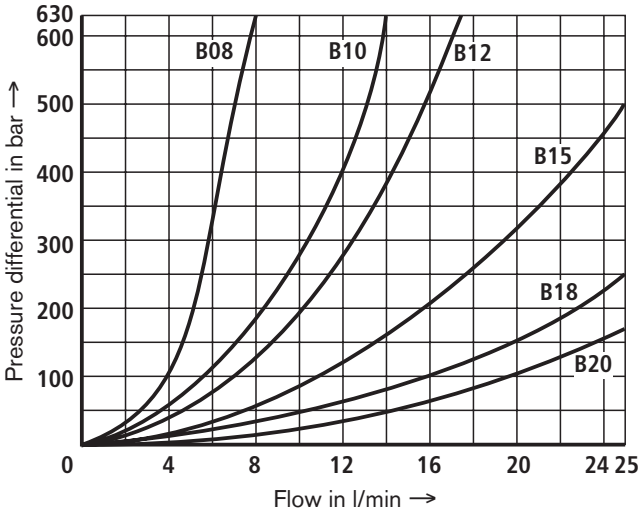

Performance limit (measured with HLP46, ϑ_{oil} = 40 °C ± 5 °C)

		Symbol	Remark	Operating pressure in bar				Flow in l/min
				P	A	B	T	
3-way circuit	U	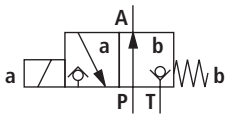	Pressure $p_P \geq p_A \geq p_T$	420/630	420/630		200	25
	C	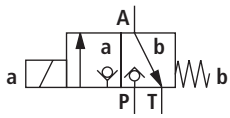		420/630	420/630		200	25
2-way circuit (only as unloading function)	U	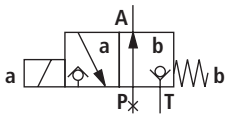	Before switching from the starting position to the operated position is possible, pressure must be applied in port A. Pressure $p_A \geq p_T$		420/630		200	25
	C	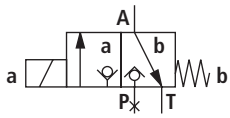	Pressure $p_A \geq p_T$		420/630		200	25
4-way circuit (flow only possible in the direction of the arrow!)	D	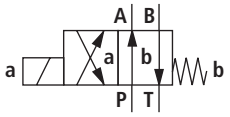	Valve (symbol "U") in conjunction with Plus-1 plate $p_P > p_A \geq p_B > p_T$	420/630	420/630	420/630	200	25
	Y	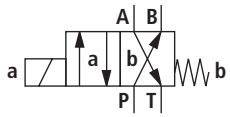	Valve (symbol "C") in conjunction with Plus-1 plate $p_P > p_A \geq p_B > p_T$	420/630	420/630	420/630	200	25

⚠ **Attention!** Please observe the "General notes" below!

General notes

- In order to reliably operate and hold the valve in its operated position, the pressures must be: P ≥ A ≥ T (for design reasons).
- Ports P, A and T (3/2 directional poppet valve) and P, A, B and T (4/2 directional poppet valve) are clearly assigned according to their task. They must not be exchanged or plugged. Flow is only permitted in the direction of the arrow.
- When using the Plus-1 plate (4/2 directional function) observe the following lower operating values: p_{min} = 8 bar; q_V > 3 l/min.
- The total flow of the valve must not be exceeded.

Unit dimensions: 3/2 directional poppet valve (nominal dimensions in mm)

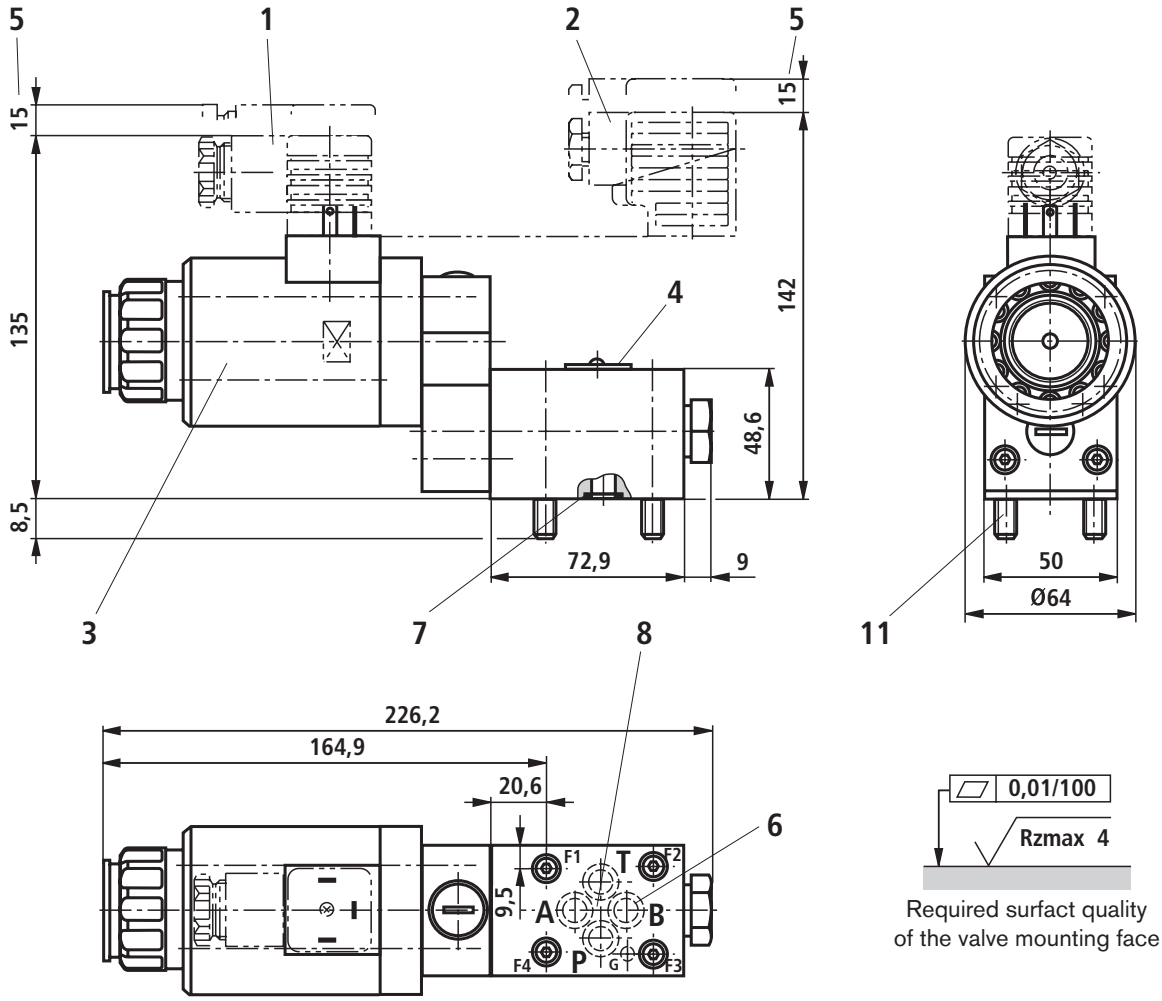

Required surfact quality of the valve mounting face

1 Mating connector **without** circuitry (separate order, see page 14)

2 Mating connector **with** circuitry (separate order, see page 14)

3 DC solenoid

4 Nameplate

5 Space required to remove mating connector

6 ⚠ **Attention!**
Port B is provided as blind countersunk hole on 3/2 directional poppet valves in the 420 bar variant, and not provided for the 630 bar variant.

7 Identical seal rings for ports A, B, P and T

8 Porting pattern to ISO 4401-03-02-0-05
(**with** locating bore and locating pin ISO 8752-3x8-St); deviating from standard: Variant “630“

11 **Valve fixing screws**
(included in the scope of supply)

– 420 bar variant:
4 hexagon socket head cap screws
ISO 4762 M5 x 50 - 10.9-flZn-240h-L
(Friction coefficient μ_{total} = 0.09 to 0.14);
tightening torque M_T = 7 Nm ± 10%,

– 630 bar variant (not to ISO 4401):
4 hexagon socket head cap screws
ISO 4762 M6 x 50 - 10.9-flZn-240h-L
(Friction coefficient μ_{total} = 0.09 to 0.14);
tightening torque M_T = 12.5 Nm ± 10%

Unit dimensions: 3/2 directional poppet valve – with detent (nominal dimensions in mm)

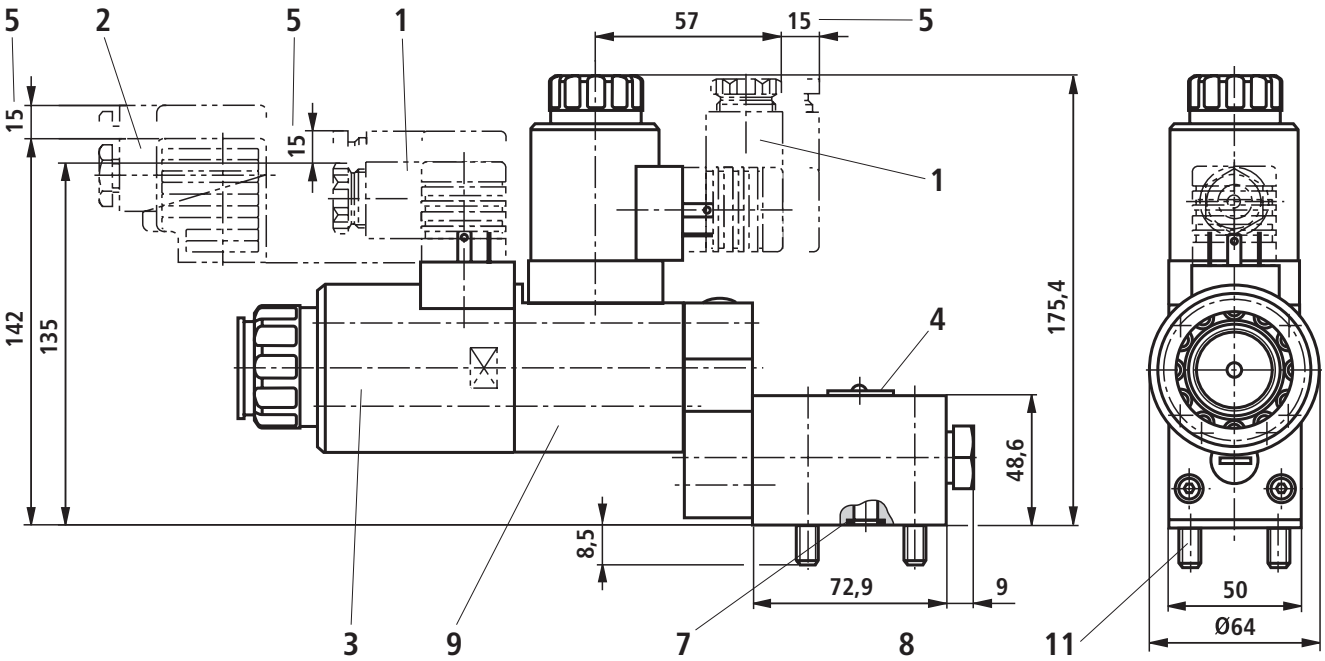

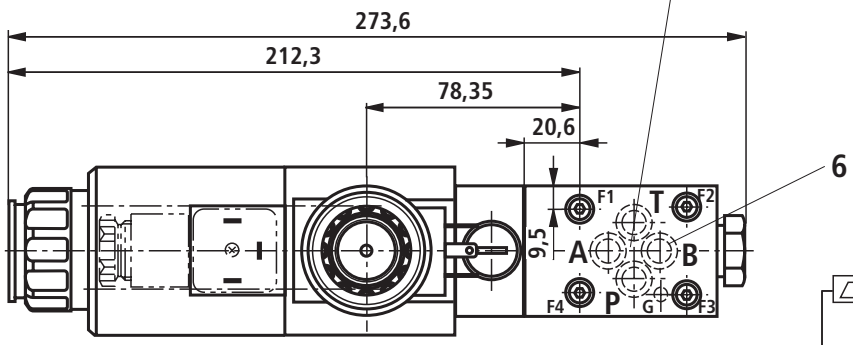

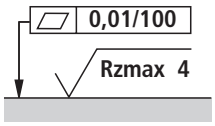

Required surfact quality of the valve mounting face

1 Mating connector **without** circuitry (separate order, see page 14)

2 Mating connector **with** circuitry (separate order, see page 14)

3 DC solenoid

4 Nameplate

5 Space required to remove mating connector

6 ⚠ **Attention!**
Port B is provided as blind countersunk hole on 3/2 directional poppet valves in the 420 bar variant, and not provided for the 630 bar variant.

7 Identical seal rings for ports A, B, P and T

8 Porting pattern to ISO 4401-03-02-0-05 (**with** locating bore and locating pin ISO 8752-3x8-St); deviating from standard: Variant "630"

9 Detent with DC solenoid

11 **Valve fixing screws**
(included in the scope of supply)

– 420 bar variant:
4 hexagon socket head cap screws ISO 4762 M5 x 50 - 10.9-flZn-240h-L
(Friction coefficient μ_{total} = 0.09 to 0.14);
tightening torque M_A = 7 Nm ± 10%,

– 630 bar variant (not to ISO 4401):
4 hexagon socket head cap screws ISO 4762 M6 x 50 - 10.9-flZn-240h-L
(Friction coefficient μ_{total} = 0.09 to 0.14);
tightening torque M_T = 12.5 Nm ± 10%

Unit dimensions: 4/2 directional poppet valve (nominal dimensions in mm)

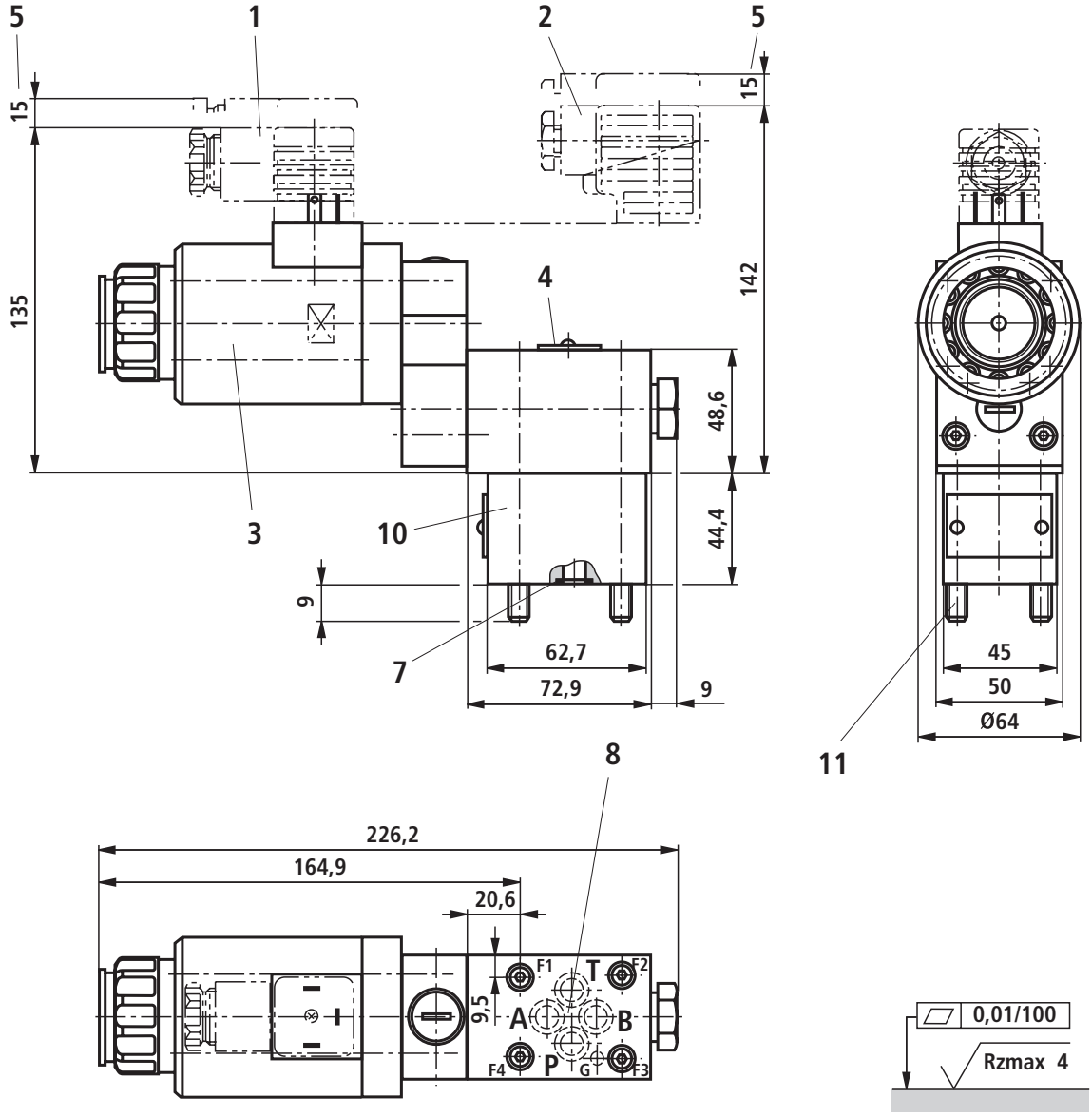

Required surfact quality of the valve mounting face

1 Mating connector **without** circuitry (separate order, see page 14)

2 Mating connector **with** circuitry (separate order, see page 14)

3 DC solenoid

4 Nameplate

5 Space required to remove mating connector

7 Identical seal rings for ports A, B, P and T

8 Porting pattern to ISO 4401-03-02-0-05 (**with** locating bore and locating pin ISO 8752-3x8-St); deviating from standard: Variant “630“

10 Plus-1 plate

11 **Valve fixing screws** (included in the scope of supply)

– 420 bar variant:
4 hexagon socket head cap screws
ISO 4762 M5 x 95 - 10.9-flZn-240h-L
(Friction coefficient μ_{total} = 0.09 to 0.14);
tightening torque M_T = 7 Nm ± 10%,

– 630 bar variant (not to ISO 4401):
4 hexagon socket head cap screws
ISO 4762 M6 x 95 - 10.9-flZn-240h-L
(Friction coefficient μ_{total} = 0.09 to 0.14);
tightening torque M_T = 12.5 Nm ± 10%

Unit dimensions: 4/2 directional poppet valve – with detent (nominal dimensions in mm)

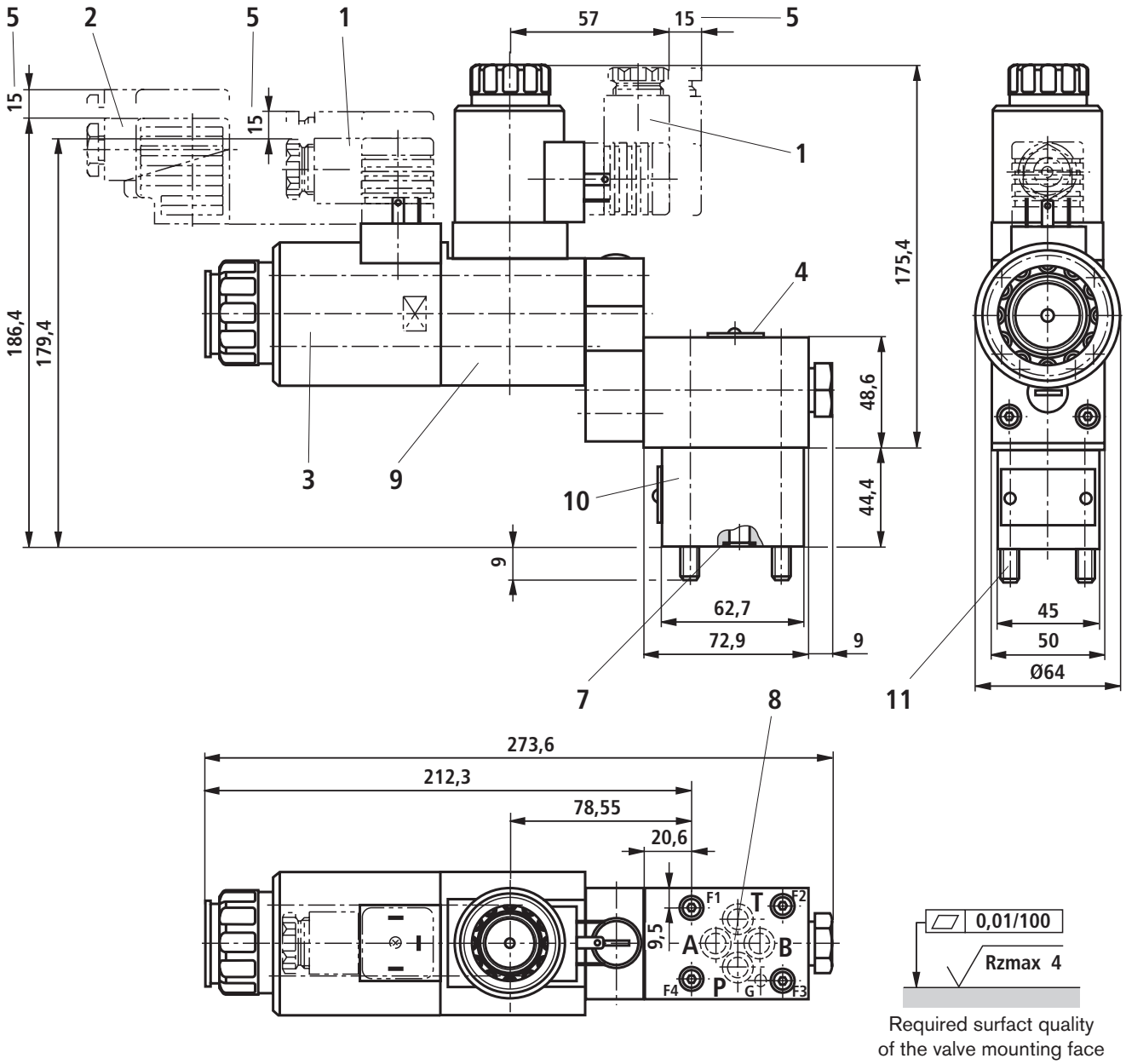

Required surfact quality of the valve mounting face

1 Mating connector **without** circuitry (separate order, see page 14)

2 Mating connector **with** circuitry (separate order, see page 14)

3 DC solenoid

4 Nameplate

5 Space required to remove mating connector

7 Identical seal rings for ports A, B, P and T

8 Porting pattern to ISO 4401-03-02-0-05 (**with** locating bore and locating pin ISO 8752-3x8-St); deviating from standard: Variant “630“

9 Detent with DC solenoid

10 Plus-1 plate

11 **Valve fixing screws** (included in the scope of supply)

– 420 bar variant:
4 hexagon socket head cap screws ISO 4762 M5 x 95 - 10.9-flZn-240h-L
(Friction coefficient μ_{total} = 0.09 to 0.14); tightening torque M_T = 7 Nm ± 10%,

– 630 bar variant (not to ISO 4401):
4 hexagon socket head cap screws ISO 4762 M6 x 95 - 10.9-flZn-240h-L
(Friction coefficient μ_{total} = 0.09 to 0.14); tightening torque M_T = 12.5 Nm ± 10%

Throttle insert

The use of a throttle insert is required, if, due to given operating conditions, flows can occur during the switching processes, which exceed the performance limit of the valve.

Example:

– Accumulator operation,
– use as pilot control valve with internal pilot oil tapping.

3/2 directional poppet valve

The throttle insert is plugged in port P of the poppet valve.

4/2 directional poppet valve

The throttle insert is plugged in port P of the Plus-1 plate.

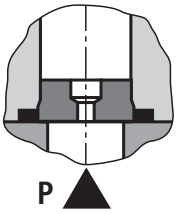

Check valve insert

The check valve insert allows a free flow from P to A and closes A to P leak-free.

3/2 directional poppet valve

The check valve throttle is plugged in port P of the poppet valve.

4/2 directional poppet valve

The check valve throttle is plugged in port P of the Plus-1 plate

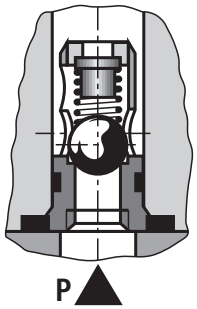

Mating connectors to DIN EN 175301-803

For details and further mating connectors, see RE 08006		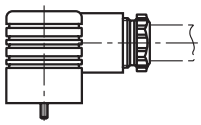	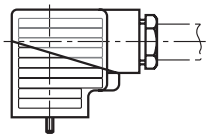		
		Material no.			
Valve side	**Colour**	Without circuitry	With indicator lamp 12 … 240 V	With rectifier 12 … 240 V	With indicator lamp and Zener diode suppressor circuit 24 V
a	Grey	**R901017010**	–	–	–
a	Black	–	**R901017022**	**R901017025**	**R901017026**

Bosch Rexroth AG
Hydraulics
Zum Eisengießer 1
97816 Lohr am Main, Germany
Phone +49 (0) 93 52 / 18-0
Fax +49 (0) 93 52 / 18-23 58
documentation@boschrexroth.de
www.boschrexroth.de

Notes

Bosch Rexroth AG
Hydraulics
Zum Eisengießer 1
97816 Lohr am Main, Germany
Phone +49 (0) 93 52 / 18-0
Fax +49 (0) 93 52 / 18-23 58
documentation@boschrexroth.de
www.boschrexroth.de

Notes

Bosch Rexroth AG
Hydraulics
Zum Eisengießer 1
97816 Lohr am Main, Germany
Phone +49 (0) 93 52 / 18-0
Fax +49 (0) 93 52 / 18-23 58
documentation@boschrexroth.de
www.boschrexroth.de